Service

Protected by copyright. Copying for private or commercial purposes, in part or in whole, is not permitted unless authorised by Volkswagen AG. Volkswagen AG does not guarantee or accept any liability with respect to the correctness of information in this document. Copyright by Volkswagen AG.

Polo Estate 1998 ➤

Automatic gearbox 01M									
Gearbox ID	CKY	DLV	DLW	DSV	ELH	EPM	EPS	FDJ	FDK
	DLY								

Edition 06.2001

satelettronica

List of Workshop Manual Repair GroupsList of Workshop Manual Repair GroupsList of Workshop Manual Repair Groups

Polo Estate 1998 ➤

Automatic gearbox 01M

Repair Group

00 - Technical data
32 - Torque converter
37 - Controls, Housing
38 - Gears, Hydraulic controls
39 - Final drive, Differential rear

Protected by copyright. Copying for private or commercial purposes, in part or in whole, is not permitted unless authorised by Volkswagen AG. Volkswagen AG does not guarantee or accept any liability with respect to the correctness of information in this document. Copyright by Volkswagen AG.

satelettronica

Technical information should always be available to the foremen and mechanics, because their careful and constant adherence to the instructions is essential to ensure vehicle road-worthiness and safety. In addition, the normal basic safety precautions for working on motor vehicles must, as a matter of course, be observed.

All rights reserved.
No reproduction without prior agreement from publisher.

Copyright © 2011 Volkswagen AG, Wolfsburg

00056406620

Contents

00 - Technical data 1
1 Identification of gearbox 1
1.1 Identification of gearbox 1
2 Information on "automatic gearbox 01M" 2
2.1 Information on "automatic gearbox 01M" 2
3 Code letters, gearbox allocation, ratios, equipment 3
3.1 Code letters, gearbox allocation, ratios, equipment 3
4 Capacities 6
4.1 Capacities 6
5 Repair with an exchange component 6
5.1 Repair with an exchange component 6
6 General repair instructions 13
6.1 General repair instructions 13

32 - Torque converter 16
1 Torque converter 16
1.1 Torque converter 16
1.2 Identification of torque converter 16
1.3 Torque converter allocation 17
1.4 Removing sleeve bearing from turbine shaft 18
1.5 Removing and installing torque converter oil seal 19
1.6 Draining torque converter 20
1.7 Installing torque convertor 21

37 - Controls, Housing 22
1 Locations of electrical/electronic components 22
1.1 Locations of electrical/electronic components 22
2 Servicing gear change mechanism 35
2.1 Servicing gear change mechanism 35
2.2 Checking shift mechanism 35
2.3 Checking and adjusting selector lever cable 36
2.4 Dismantling and assembling selector mechanism 37
2.5 Removing and installing selector lever handle 42
2.6 Removing and installing selector lever cable 44
2.7 Dismantling and assembling selector lever 47
3 Checking gearbox 51
3.1 Checking gearbox 51
3.2 Checking main pressure 52
3.3 Fault finding table for "4-speed automatic gearbox" 54
4 Removing and installing gearbox 55
4.1 Removing and installing gearbox 55
4.2 Transporting automatic gearbox 68
4.3 Securing gearbox to assembly stand 70
5 Checking ATF level and topping up 72
5.1 Checking ATF level and topping up 72
6 Gearbox with coupling elements 77
6.1 Gearbox with coupling elements 77
6.2 Position of coupling elements 78
7 Dismantling and assembling gearbox 80
7.1 Dismantling and assembling gearbox 80
7.2 Removing and installing ATF cooler and ATF filler tube 80
7.3 Dismantling and assembling planetary gearbox -Overview- 82

Copyright by Volkswagen AG. Volkswagen AG does not guarantee or accept any liability with respect to the correctness of information in this document. Copying for private or commercial purposes, in part or in whole, is not permitted unless authorised by Volkswagen AG.
satelettronica

7.4 I - Removing and installing ATF pump to supporting tube . . . 83
7.5 II - Removing and installing reverse gear clutch -K2- to large sun gear . . . 87
7.6 III - Removing and installing freewheel and reverse gear brake -B1- . . . 91
7.7 IV - Planet carrier and gearbox housing with input gear and cover . . . 94
7.8 Dismantling planetary gearbox . . . 97
7.9 Assembling planetary gearbox . . . 107
7.10 Installing exchange components . . . 120
7.11 Overview of all planetary gearbox adjustments . . . 132
7.12 Adjusting planet carrier . . . 133
7.13 Adjusting reverse gear brake -B1- . . . 140
7.14 Adjusting clutch play between -K1- and -K2- . . . 146
7.15 Adjusting 2nd and 4th gear brake -B2- . . . 152

38 - Gears, Hydraulic controls . . . 165
1 Dismantling and assembling ATF pump . . . 165
1.1 Dismantling and assembling ATF pump . . . 165
2 Dismantling and assembling freewheel with -B1- piston . . . 170
2.1 Dismantling and assembling freewheel with -B1- piston . . . 170
3 Dismantling and assembling 1st to 3rd gear clutch -K1- . . . 173
3.1 Dismantling and assembling 1st to 3rd gear clutch -K1- . . . 173
4 Dismantling and assembling reverse gear clutch -K2- . . . 179
4.1 Dismantling and assembling reverse gear clutch -K2- . . . 179
5 Dismantling and assembling 3rd and 4th gear clutch -K3- with turbine shaft . . . 183
5.1 Dismantling and assembling 3rd and 4th gear clutch -K3- with turbine shaft . . . 183
6 Removing and installing oil pan . . . 188
6.1 Removing and installing oil pan . . . 188
7 Removing and installing oil strainer . . . 190
7.1 Removing and installing oil strainer . . . 190
8 Removing and installing valve chest . . . 191
8.1 Removing and installing valve chest . . . 191
8.2 Assembly overview . . . 191
8.3 Sequence for dismantling and assembling . . . 200
9 Dismantling and assembling parking lock . . . 203
9.1 Dismantling and assembling parking lock . . . 203

39 - Final drive, Differential rear . . . 214
1 Checking oil in final drive . . . 214
1.1 Checking oil in final drive . . . 214
1.2 Vehicles without sealing plug in final drive cover . . . 214
1.3 Vehicles with sealing plug in final drive cover . . . 215
2 Renewing oil seals for flanged shafts . . . 216
2.1 Renewing oil seals for flanged shafts . . . 216
3 Dismantling and assembling final drive . . . 222
3.1 Dismantling and assembling final drive . . . 222
3.2 Repair overview of final drive . . . 222
3.3 Removing and installing input gear . . . 224
3.4 Removing and installing drive pinion . . . 231
3.5 Removing and installing differential . . . 243
3.6 Dismantling and assembling differential . . . 253
4 Adjusting final drive . . . 266
4.1 Adjusting final drive . . . 266
4.2 Overview of adjustments . . . 266
4.3 Adjustments to be completed after renewing individual components . . . 268
4.4 Adjusting drive pinion . . . 269
4.5 Adjusting input gear . . . 271

satelettronica

4.6 Adjusting differential 273
5 Definitions 274
5.1 Definitions 274

Protected by copyright. Copying for private or commercial purposes, in part or in whole, is not permitted unless authorised by Volkswagen AG. Volkswagen AG does not guarantee or accept any liability with respect to the correctness of information in this document. Copyright by Volkswagen AG.

satelettronica

Protected by copyright. Copying for private or commercial purposes, in part or in whole, is not permitted unless authorised by Volkswagen AG. Volkswagen AG does not guarantee or accept any liability with respect to the correctness of information in this document. Copyright by Volkswagen AG.

satelettronica

00 - Technical data

1 - Identification of gearbox

1.1 - Identification of gearbox

The 4-speed automatic gearbox 01M is installed in combination with a 4-cylinder engine in the Caddy 1996 ▸, Polo Classic 1996 ▸and Polo estate 1998 ▸. Allocation => Page 3 .

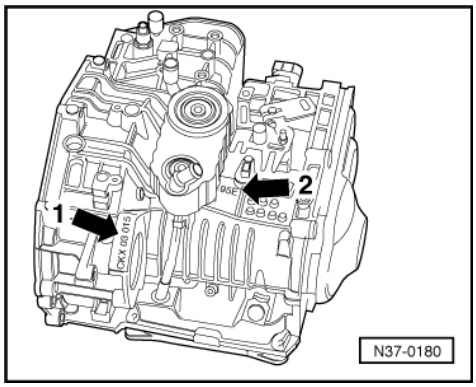

Location on gearbox

-> Code letters (arrow 1)

Automatic gearbox 01M (arrow 2)

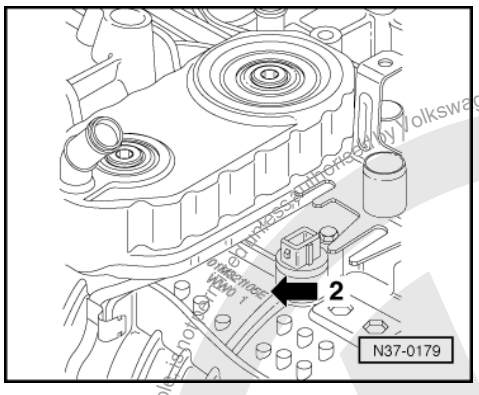

-> Automatic gearbox 01M (arrow 2)

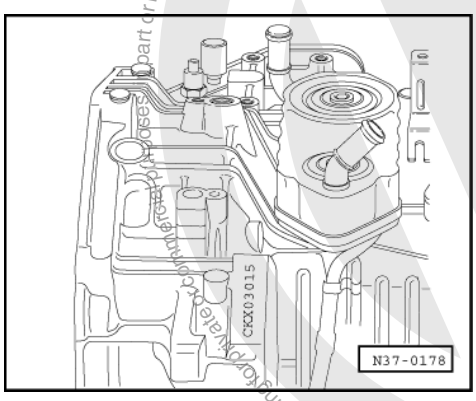

satelettronica
Protected by copyright. Copyright by Volkswagen AG. Volkswagen AG does not guarantee or accept any liability with respect to the correctness of information in this document. Copyright by Volkswagen AG.

Example:

CKX	03	01	5
I	I	I	I
Code letters	Day	Month	Year (1995) of manufacture

The code letters of the gearbox are also given on the vehicle data plates.

2 - Information on "automatic gearbox 01M"

2.1 - Information on "automatic gearbox 01M"

Comprehensive information on 4-speed automatic gearboxes is given in self study programme No. 172.

Gearbox

The 4-speed automatic gearbox 01M is equipped with 4 hydraulically activated forward gears. When the lock-up clutch is closed these forward gears become mechanically driven gears by cutting-out the torque converter slip.

Torque converter

The torque converter is equipped with a lock-up clutch. The lock-up clutch is closed dependent on load and speed and drives 1st, 2nd, 3rd and 4th gears mechanically independent of slip.

In some cases, it may be necessary for installation of a new converter to remove the sleeve bearing from the turbine shaft. For instructions on performing this task => Page 16 .

Guided fault finding, vehicle self-diagnosis and testing

Before repair work is carried out on the automatic gearbox, the fault cause should be determined as accurately as possible using vehicle diagnosis, testing and information system VAS 5051 in modes of operation "Guided fault finding", "Vehicle self-diagnosis" and "Test instruments".

Control unit -J217- with driving situation gear changes (fuzzy logic)

Determining the driving situation and driving resistance dependent gear change point happens automatically.

Advantages:

- Gear changes will be consumption orientated
- Maximum engine output is always available
- Individual adaption of gear change points in all driving situations
- Gear change points are infinitely variable

Gear change point variations for gradients

An additional gear change map automatically selects gear changes for gradients dependent upon accelerator pedal position and driving speed.

- Gear change map for extreme uphill stretches is matched to engine output
- Gear change map for extreme downhill stretches is matched to the braking effect of the engine

Protected by copyright. Copying for private or commercial purposes, in part or in whole, is not permitted unless authorised by Volkswagen AG. Volkswagen AG does not guarantee or accept any liability with respect to the correctness of information in this document. Copyright by Volkswagen AG.
satelettronica

3 - Code letters, gearbox allocation, ratios, equipment

3.1 - Code letters, gearbox allocation, ratios, equipment

Automatic gearbox		01M					
Gearbox	Codes	CKY		DLV		DLW	
	Manufactured from to	01.95 01.97		01.97 12.99		01.97	
Torque converter	Code letters						
for turbine shaft with sleeve bearing => Page 17		QADC		QADC		QADC	
for turbine shaft without sleeve bearing => Page 18		QADD		QADD		QADD	
Valve chest	Codes	QCA		QFA		QFA	
Number of plates		Inner	Outer	Inner	Outer	Inner	Outer
	Clutch -K1-	5	5	4	4	4	4
	Clutch -K2-	5	5	3	3	3	3
	Clutch -K3-	5	4	5	4	5	4
	Brake -B1-	5	5	4	4	4	4
	Brake -B2-	6	7	4	5	4	5
Allocation	Model	Caddy 1996 ‣ Polo Classic 1996 ‣ Polo estate 1998 ‣		Caddy 1996 ‣ Polo Classic 1996 ‣ Polo estate 1998 ‣		Caddy 1996 ‣ Polo Classic 1996 ‣ Polo estate 1998 ‣	
	Engine	1.8 l - 66 kW		1.6 l - 74 kW		1.8 l - 66 kW	

Gearbox	Codes		CKY	DLV	DLW
Ratios	1st gear		2.714	2.714	2.714
	2nd gear		1.441	1.441	1.441
	3rd gear		1.000	1.000	1.000
	4th gear		0.742	0.742	0.742
	Reverse gear		2.884	2.884	2.884
Intermediate drive	No. of teeth	Input gear	45	45	45
		Output gear	44	44	44
	Ratio		0.978	0.978	0.978
Final drive	No. of teeth	Drive pinion	17	17	17
		Crown wheel	77	77	77
	Ratio		4.529	4.529	4.529
Drive shaft	Flange ø mm		100	100	100
ATF cooler	Equipment		Pressure-side 6-row	Pressure-side 6-row	Pressure-side 6-row

Automatic gearbox		01M		
Gearbox	Codes	DSV	ELH	EPM
	Manufactured from to	05.97 12.99	05.99 12.99	12.99
Torque converter	Code letters			
for turbine shaft with sleeve bearing => page 17		QADC	QADC	...

Protected by copyright. Copying for private or commercial purposes, in part or in whole, is not permitted unless authorised by Volkswagen AG. Volkswagen AG does not guarantee or accept any liability with respect to the correctness of information in this document. Copyright by Volkswagen AG.
sateletronica

for turbine shaft without sleeve bearing => Page 18		QADD		QADD		QADD	
Valve chest	Codes	QFA		QFA		QFA	
Number of plates		Inner	Outer	Inner	Outer	Inner	Outer
	Clutch -K1-	4	4	4	4	4	4
	Clutch -K2-	3	3	3	3	3	3
	Clutch -K3-	5	4	5	4	5	4
	Brake -B1-	4	4	4	4	4	4
	Brake -B2-	4	5	4	5	4	5
Allocation	Model	Caddy 1996 ▸ Polo Classic 1996 ▸ Polo estate 1998 ▸		Caddy 1996 ▸ Polo Classic 1996 ▸ Polo estate 1998 ▸		Caddy 1996 ▸ Polo Classic 1996 ▸ Polo estate 1998 ▸	
	Engine	1.6 l - 55 kW		1.6 l - 74 kW		1.6 l - 74 kW	

Gearbox	Codes		DSV	ELH	EPM
Ratios	1st gear		2.714	2.714	2.714
	2nd gear		1.441	1.441	1.441
	3rd gear		1.000	1.000	1.000
	4th gear		0.742	0.742	0.742
	Reverse gear		2.884	2.884	2.884
Intermediate drive	No. of teeth	Input gear	45	45	45
		Output gear	44	44	44
	Ratio		0.978	0.978	0.978
Final drive	No. of teeth	Drive pinion	16	17	17
		Crown wheel	78	77	77
	Ratio		4.875	4.529	4.529
Drive shaft	Flange ø mm		for triple roller joint	100	100
ATF cooler	Equipment		Pressure-side 6-row	Pressure-side 6-row	Pressure-side 6-row

Automatic gearbox			01M				
Gearbox	Codes		EPS		FDJ		FDK
	Manufactured	from to	12.99		01.00		01.00
Torque converter	Codes		QADD		QADD		QADD
Valve chest	Codes		QFA		QFA		QFA
Number of plates			Inner	Outer	Inner	Outer	Inner	Outer
	Clutch -K1-		4	4	4	4	5	5
	Clutch -K2-		3	3	3	3	4	4
	Clutch -K3-		5	4	5	4	5	4
	Brake -B1-		4	4	4	4	5	5
	Brake -B2-		4	5	4	5	4	5
Allocation	Model		Caddy 1996 ▸ Polo Classic 1996 ▸ Polo estate 1998 ▸		Caddy 1996 ▸ Polo Classic 1996 ▸ Polo estate 1998 ▸		Caddy 1996 ▸ Polo Classic 1996 ▸ Polo estate 1998 ▸	
	Engine		1.6 l - 55 kW		1.6 l - 74 kW		2.0 l - 85 kW	

Gearbox	Codes	EPS	FDJ	FDK
Ratios	1st gear	2.714	2.714	2.714

Protected by copyright. Copying for private or commercial purposes, in part or in whole, is not permitted unless authorised by Volkswagen AG. Volkswagen AG does not guarantee or accept any liability with respect to the correctness of information in this document. Copyright by Volkswagen AG.

satelettronica

	2nd gear		1.441	1.441	1.441
	3rd gear		1.000	1.000	1.000
	4th gear		0.742	0.742	0.742
	Reverse gear		2.884	2.884	2.884
Intermediate drive	No. of teeth	Input gear	45	45	45
		Output gear	44	44	44
	Ratio		0.978	0.978	0.978
Final drive	No. of teeth	Drive pinion	16	17	18
		Crown wheel	78	77	76
	Ratio		4.875	4.529	4.222
Drive shaft	Flange ø mm		for triple roller joint	100	for triple roller joint
ATF cooler	Equipment		Pressure-side 6-row	Pressure-side 6-row	Pressure-side 6-row

Automatic gearbox			01M					
Gearbox	Code letters		DLY					
	Manufactured	from	01.97					
		to						
Torque converter for turbine shaft with sleeve bearing => Page 17	Code letters		QADC					
for turbine shaft without sleeve bearing => Page 18			QADD					
Valve body	Code letters		QFA					
Number of plates			Inner	Outer	Inner	Outer	Inner	Outer
	Clutch -K1-		5	5				
	Clutch -K2-		4	4				
	Clutch -K3-		5	4				
	Brake -B1-		5	5				
	Brake -B2-		4	5				
Allocation	Model		Caddy 1996 ▸ Polo Classic 1996 ▸ Polo Estate 1998 ▸					
	Engine		2.0 l - 85 kW					

Gearbox	Code letters		DLY		
Ratios	1st gear		2.714		
	2nd gear		1.441		
	3rd gear		1.000		
	4th gear		0.742		
	Reverse gear		2.884		
Intermediate drive	No. of teeth	Input gear	45		
		Output gear	44		
	Ratio		0.978		
Final drive	No. of teeth	Drive pinion	18		
		Crown wheel	76		
	Ratio		4.222		
Drive shaft	Flange ø mm		100		

satelettronica

ATF cooler	Equipment	Pressure-side 6-row		

4 - Capacities

4.1 - Capacities

Planetary gearbox

Capacities	Planetary gearbox	Automatic gearbox
Initial filling	5.3 ltr.	01M
Oil change	Filled for life No change	
Lubricant	VW ATF	

VW ATF is obtainable as a replacement part.
Container size 0.5 ltr. -Part No. G 052 162 A1
Container size 1.0 ltr. -Part No. G 052 162 A2

Final drive

Capacities	Final drive	Automatic gearbox
Initial filling	0.75 ltr.	01M
Oil change	Filled for life No change	
Lubricant	Gear oil SAE75 W90 (synthetic oil)	

Gear oil SAE 75 W90 (synthetic oil) is available as a replacement part.
Size 0.5 ltr. - Replacement part No. G 052 145 A1
Size 1.0 ltr. - Replacement part No. G 052 145 A2
Checking oil level in front final drive => Page 214 .

5 - Repair with an exchange component

5.1 - Repair with an exchange component

What is an exchange component?

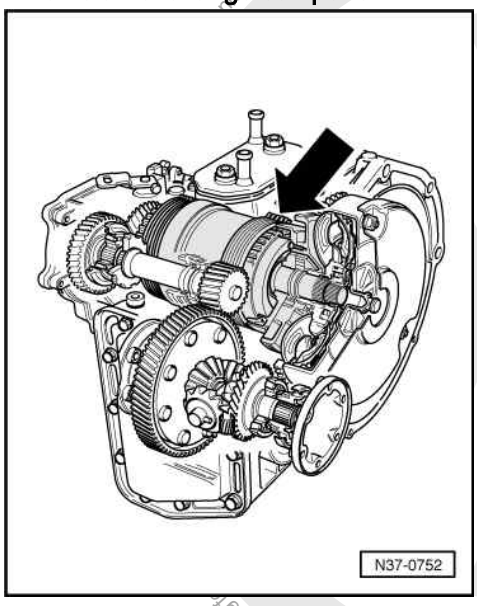

satelettronica

-> The exchange component -arrow- is an economical replacement part set. It contains all the clutches and brakes, the ATF pump, the planetary gears and the valve chest of the respective gearbox.

You can also find a description of the exchange component and measurement procedure for adjusting clutch play in the

VW/Audi TV programme No. 42, API Technik Direkt of 28.02.1998.

You can order this programme (in the German language) with item number 042.5124.67.01 from the hotline + +49 5423 94 34 44.

The list of parts included in the exchange component is described from => 8 .

The O-rings for the ATF radiator and fill pipe, the multi-function switch -F125- and the senders -G68- and -G38- are not included.

If these rings are required, they must be ordered additionally.

Seals for the oil pan and the intermediate drive must also be ordered separately.

The conductor strip for the valve chest must also be ordered separately, if required.

How does one order exchange components?

The exchange component is allocated to the gearbox according to the gearbox code and can be ordered from Spare Parts Sales, like every other genuine spare part as well.

Adjustment work

Only the clutch play must be adjusted during the installation of an exchange component.

This procedure is described in the work sequence in this workshop manual.

Removing exchange component => 97 , Dismantling planetary gears
Installing exchange component => 120

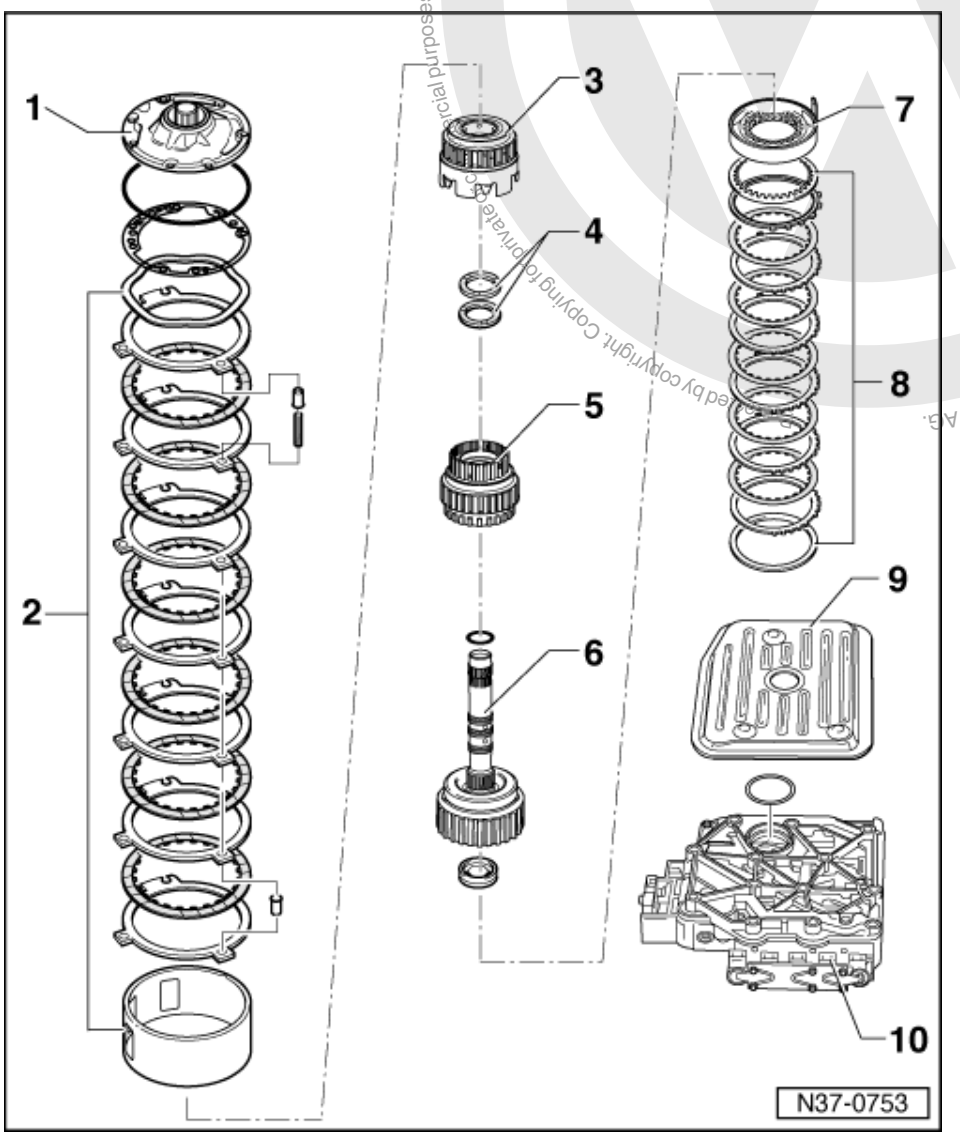

satelettronica

The entire contents of an exchange component

1 ATF pump with -B2- piston
2 -B2- components
- => 10

3 Reverse gear clutch -K2-
4 Shims for clutch play
- shims of various colours and thicknesses

5 1st to 3rd gear clutch -K1-
- Clutches -K1- and -K3- may be pressed together

6 3rd and 4th gear clutch -K3- with turbine shaft
- Clutches -K1- and -K3- may be pressed together

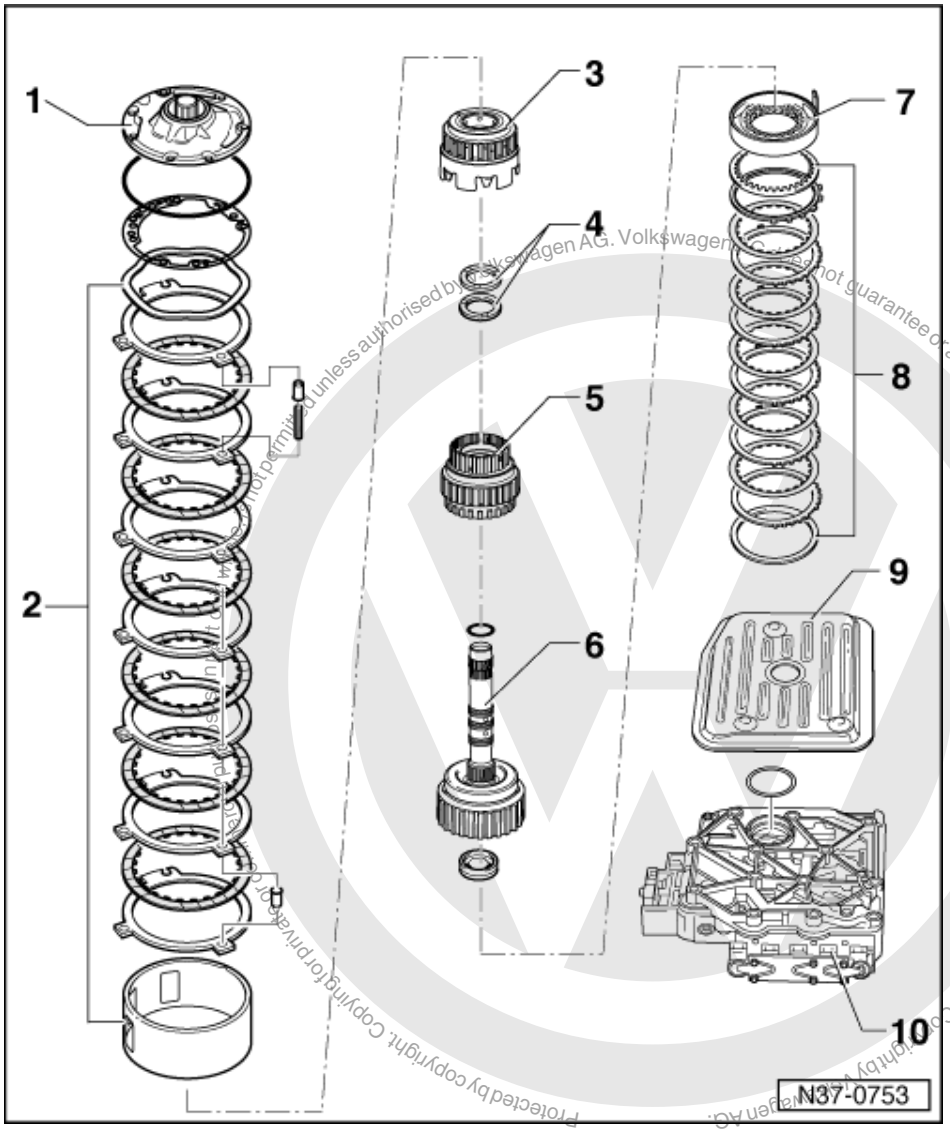

7 Freewheel with -B1- piston
8 -B2- components
- => 9

9 ATF screen
10 Valve chest

satelettronica

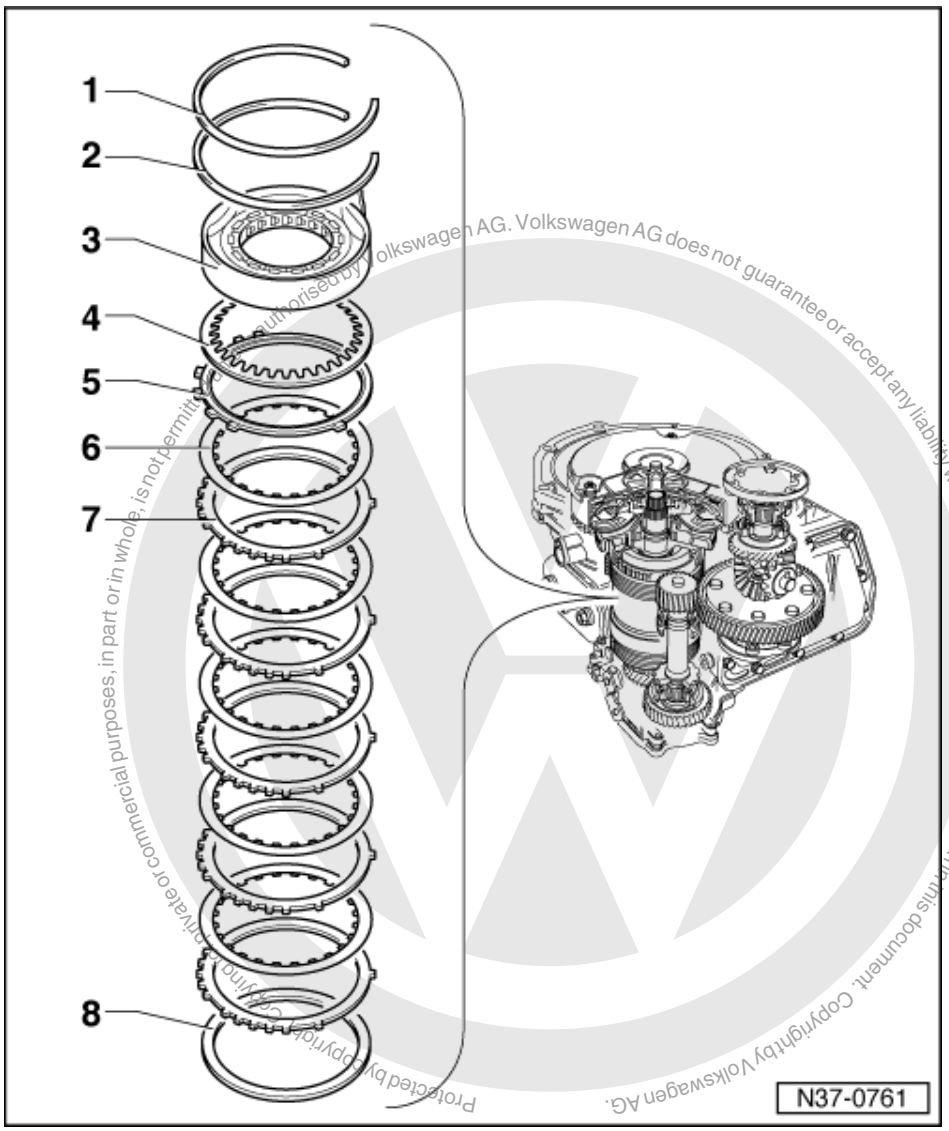

Protected by copyright. Copying for private or commercial purposes, in part or in whole, is not permitted unless authorised by Volkswagen AG. Volkswagen AG does not guarantee or accept any liability with respect to the correctness of information in this document. Copyright by Volkswagen AG.

satelettronica

-B1- components

1 Circlip
- For supporting tube -B2-

2 Circlip
- For freewheel

3 Freewheel with -B1- piston
4 Dished spring
5 Pressure plate -B1-
6 Inner plate, -B1-
7 Outer plate, -B1-
8 Shim

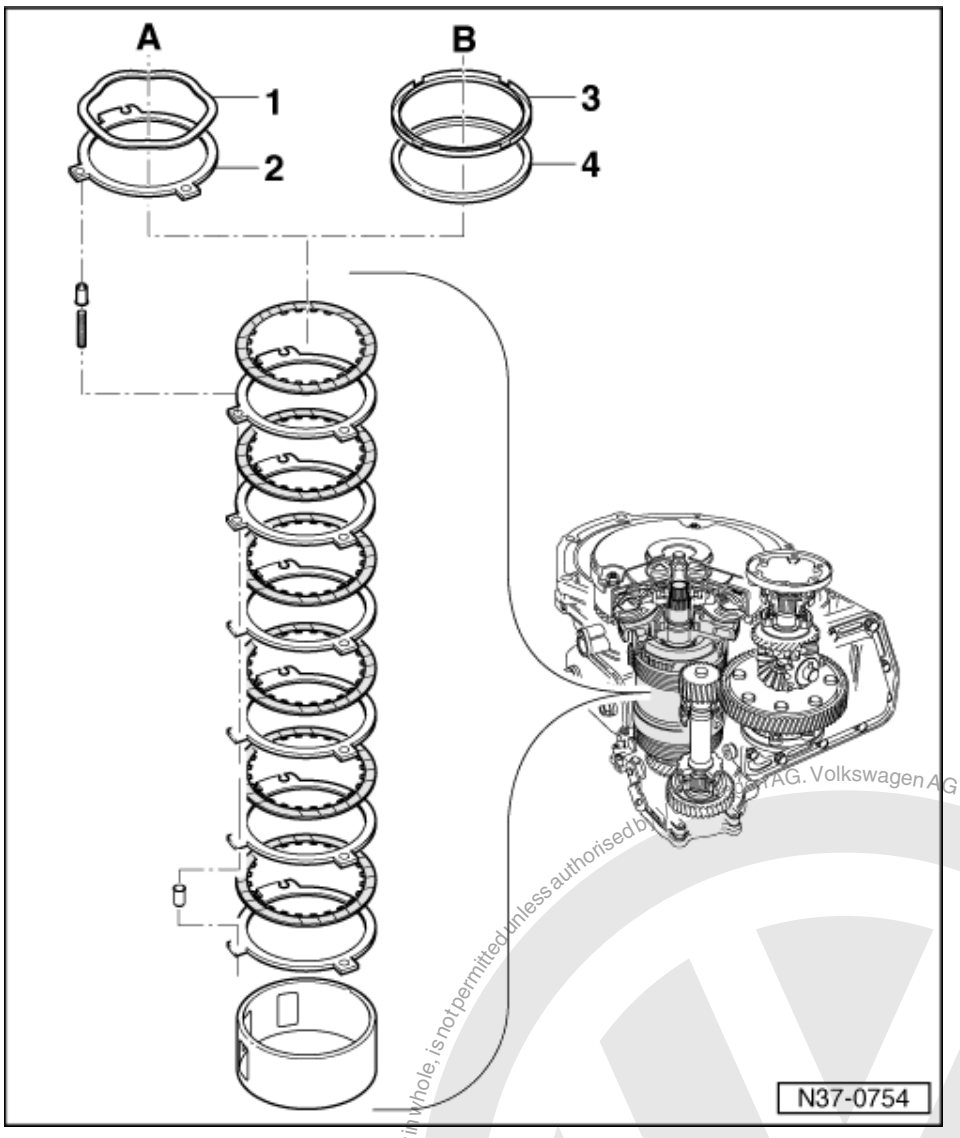

-B2- components

There are two versions of this brake.

Only gearbox code CKY with:

1 **Corrugated washer**
2 **Outer plate -B2-**

or

all other gearboxes with:

3 **Retaining ring**
4 **Shim**

Protected by copyright. Copying for private or commercial purposes, in part or in whole, is not permitted unless authorised by VW AG. Volkswagen AG does not guarantee or accept any liability with respect to the correctness of information in this document. Copyright by Volkswagen AG.
satelettronica

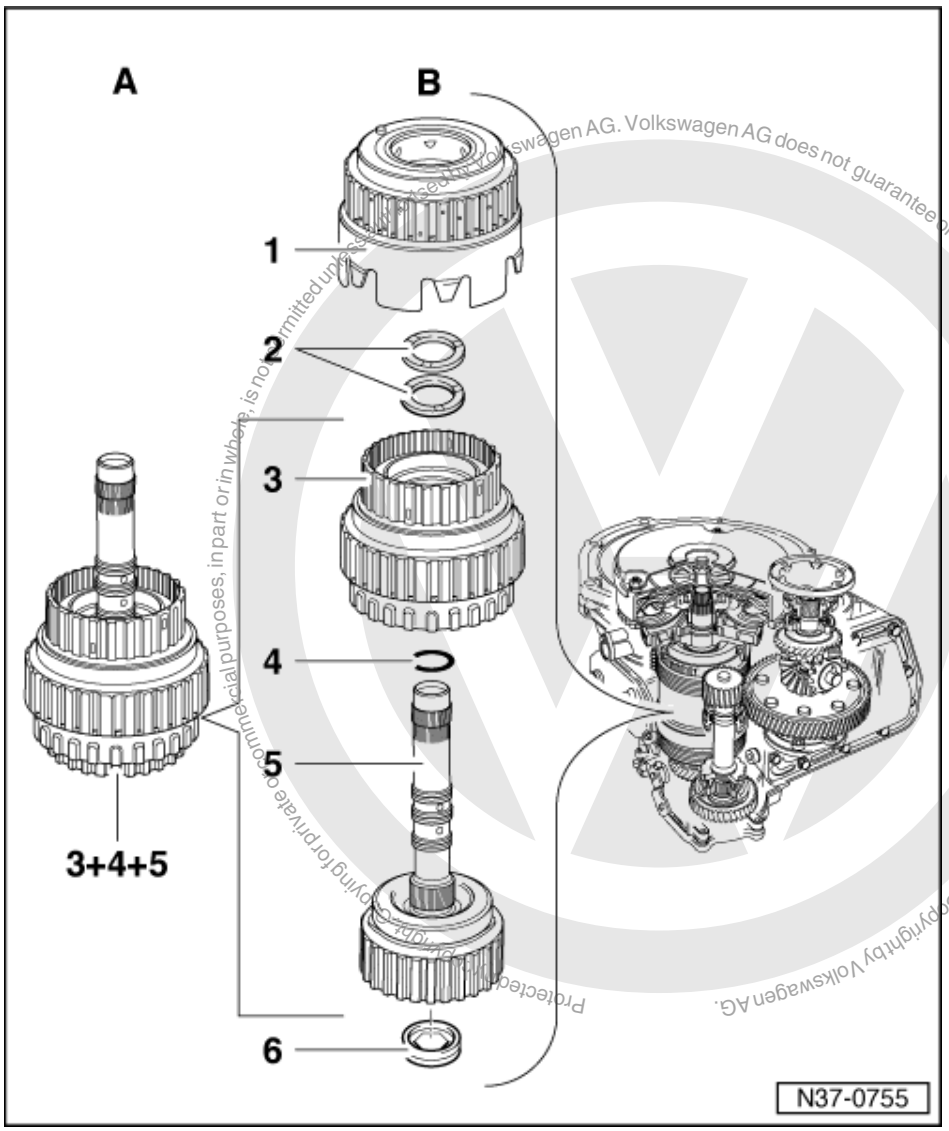

Protected by copyright. Copying for private or commercial purposes, in part or in whole, is not permitted unless authorised by Volkswagen AG. Volkswagen AG does not guarantee or accept any liability with respect to the correctness of information in this document. Copyright by Volkswagen AG.

satelettronica

Clutches

1 Reverse gear clutch -K2-
2 Shims for clutch play
- Up to 3 shims may be installed

3 1st to 3rd gear clutch -K1-
4 Seal
5 3rd and 4th gear clutch -K3- with turbine shaft

There are two versions each of clutches -K1- and -K3-.

Version "A":

3+4+5 - Clutches are pressed together; they do not need to be pressed apart.

Version "B":

Clutches can be set together loosely.

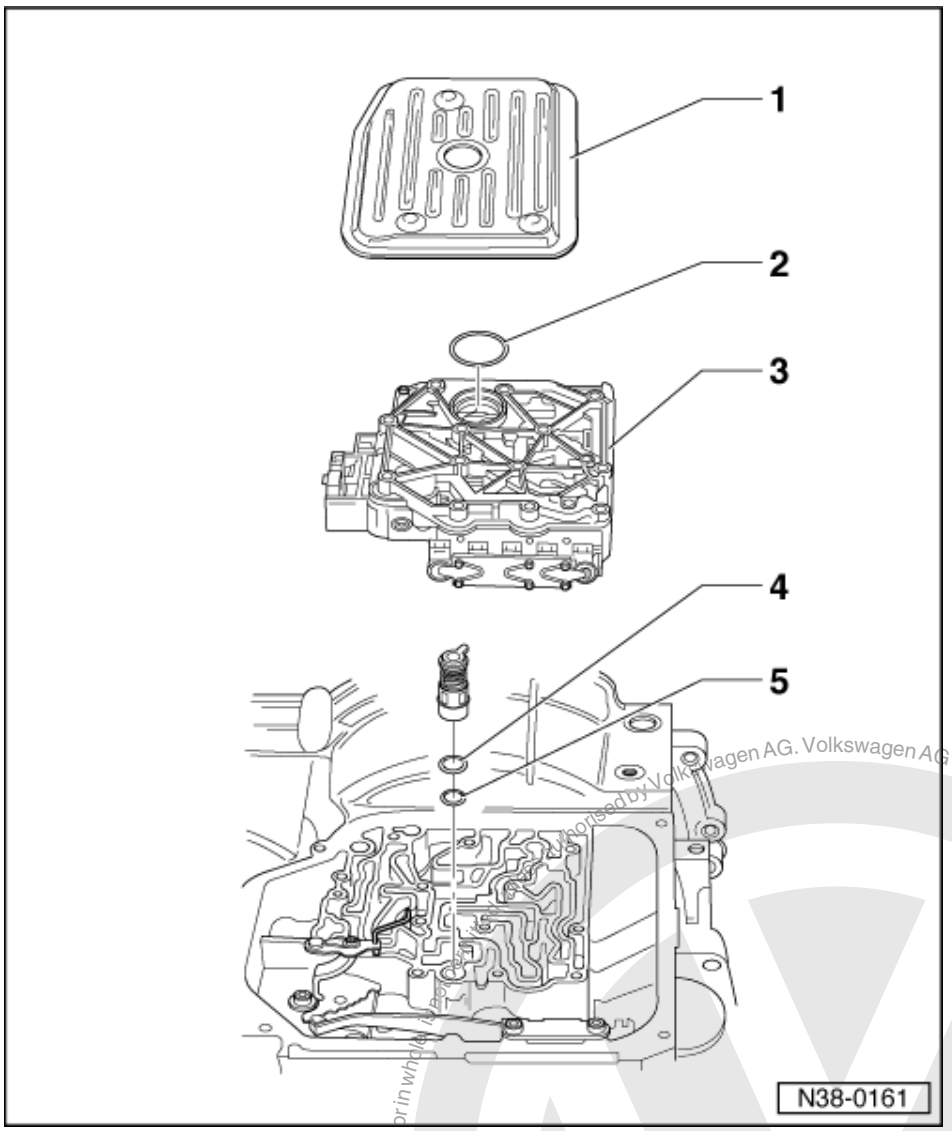

Valve chest with ATF screen

1 ATF strainer
2 Gasket
3 Valve chest
- The valve chest included in the exchange component is always without the conductor strip.
- The conductor strip must be ordered separately, if needed.
- In addition, but not pictured here, an operating rod for the manual selector valve is included in the exchange component.

4 O-ring
5 O-ring

Protected by copyright. Copying for private or commercial purposes, in part or in whole, is not permitted unless authorised by Volkswagen AG. Volkswagen AG does not guarantee or accept any liability with respect to the correctness of information in this document. Copyright by Volkswagen AG.
satelettronica

6 - General repair instructions

6.1 - General repair instructions

The maximum possible care and cleanliness and proper tools are essential to ensure satisfactory and successful gearbox repairs. The usual basic safety precautions also, naturally apply when carrying out vehicle repairs.

A number of generally applicable instructions for individual repair operations, which are otherwise mentioned at various points in the Workshop Manual, are summarized here. They apply to this Workshop Manual.

Special tools

A list of special tools and workshop equipment required for repair procedures in a manual can be found at the start of each repair group section and in the: "Special Tools and Workshop Equipment" catalogue.

The catalogue is also available on CD-ROM and can be ordered the usual way via Bertelsmann.

Gearbox

- If the automatic gearbox has been exchanged, the following fluid levels are to be checked:
  - ATF in planetary gearbox => page 72 .
  - Gear oil in front final drive => page 214 .
  - Fill levels and specifications =>page 6 .
- Engine must not run if oil pan or ATF has been removed. Do not tow vehicle.
- After removing gearbox, prevent torque converter from falling out.
- Thoroughly clean connecting points and surrounding areas and then loosen bolts.
- Before installing torque converter, check for sleeve bearing in turbine shaft => 16 .
- When installing gearbox, ensure proper seating of dowel sleeves between engine and gearbox.
- Lay removed parts on a clean surface and cover to prevent them from becoming dirty. Use film and paper. Do not use fluffy cloths!
- Only install clean parts: Remove packing from replacement parts immediately prior to installation and not before.
- If repair work cannot be performed immediately, cover replacement parts from which packing has been removed.
- Initiate basic setting after installing gearbox.

Gaskets, sealing rings

- Always renew O-rings, oil seals and gaskets.
- Once oil seal/gasket has been removed, check contact surface on housing or shaft for burrs and damage. Rectify as necessary.
- Thoroughly clean housing connecting surfaces and apply sealant AMV 188 200 03.

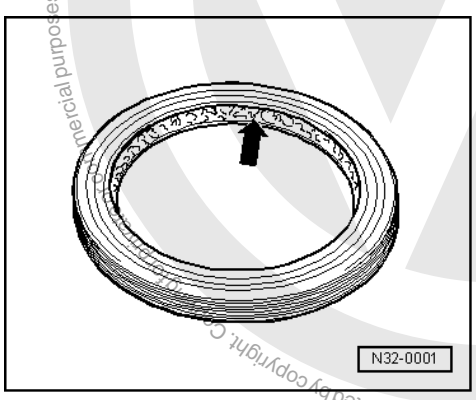

- -> Before installing shaft-type oil seal, half fill space between sealing lips with grease G 052 128 A1 -arrows- and then install.
- Open side of oil seal faces oil.
- Before installing oil seals, moisten circumference of seal and sealing lip with ATF or gear oil depending on fitting location.
- Only use ATF for automatic transmission components. Other types of lubrication cause faults to occur in the gearbox hydraulics.

satelettronica

- Check ATF level in planetary gearbox or gear oil level in final drive following installation. Top up as necessary.
  - ATF in planetary gearbox => page 72 .
  - Gear oil in front final drive => page 214 .
  - Fill levels and specifications =>page 6 .

Locking devices

- Do not overstretch circlips. Renew as necessary.

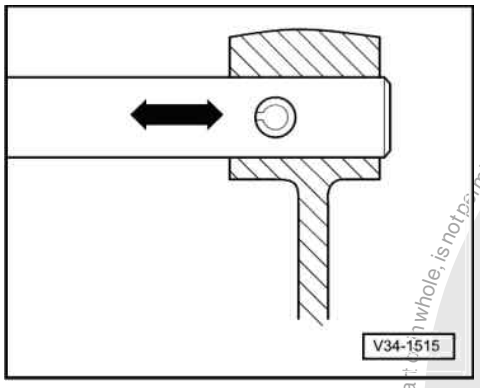

- Circlips must locate properly in the groove.
- -> Renew spring pins
  Installation position: Slot longitudinal to line of force.

Bolts and nuts

- Tighten and loosen bolts and nuts for securing covers and housings in a diagonal sequence.
- Do not cant particularly sensitive parts such as the valve chest. Loosen and tighten nuts and bolts gradually and in diagonal sequence.
- Tightening torques as specified are for unoiled bolts and nuts.
- Clean threads of bolts that were applied with locking fluid using a wire brush and apply AMV 185 100 A1 before replacing.
- Use thread tap to remove remains of locking fluid from all threaded holes in which self-locking bolts are to be screwed. Otherwise there is a risk that the bolts will shear the next time they are removed.
- Renew self-locking bolts and nuts.
- Always renew bolts which must be first tightened and then further tightened to a specified degree.

Bearings

- Taper roller bearings are allocated according to gearbox date of manufacture and gearbox code in the Parts Catalogue.
- Taper roller bearings fitted to one shaft must be renewed as a set. Use same make of bearings.
- Install needle bearings with lettered side (thicker metal) towards fitting tool.
- Heat taper roller bearing inner races to approx. 100 °C before installing.
- Do not interchange outer or inner races of bearings of the same size. The bearings are matched in pairs.
- Depending on fitting location, apply gear oil or ATF to bearings before installing.

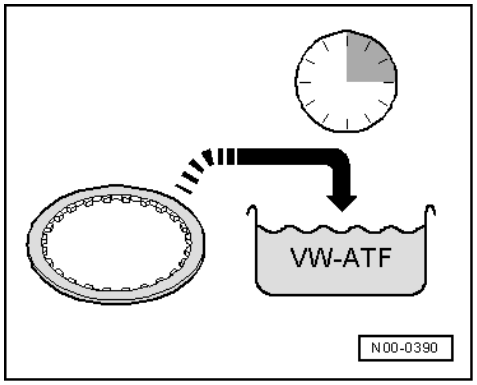

Protected by copyright. Copying for private or commercial purposes, in part or in whole, is not permitted unless authorised by Volkswagen AG. Volkswagen AG does not guarantee or accept any liability with respect to the correctness of information in this document. Copyright by Volkswagen AG.
satelettronica

Protected by copyright. Copying for private or commercial purposes, in part or in whole, is not permitted unless authorised by Volkswagen AG. Volkswagen AG does not guarantee or accept any liability with respect to the correctness of information in this document. Copyright by Volkswagen AG.

Inner plates

- -> Soak new inner plates in ATF for 15 minutes before installing.

Clutches

- Clutches K1, K2 and K3 are to be disassembled only for cleaning; if individual parts are defective, renew entire clutch. Clutches are allocated according to gearbox code.

Shims

- Measure shims at several points with a micrometer. Tolerance variations make it possible to find the exact shim thickness required.
- Check for burrs and damage.
- Only install perfect shims.

Valve chest

- The valve chest should be renewed if scorched coupling elements are discovered.
- The valve chest should be allocated according to the gearbox code => Parts Catalogue.
- Initiate basic setting after installing a new valve chest.

Guided fault finding, vehicle self-diagnosis and testing

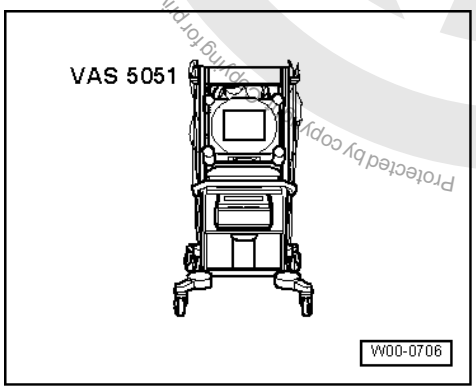

- -> Before repair work is carried out on the automatic gearbox, the fault cause should be determined as accurately as possible using vehicle diagnosis, testing and information system VAS 5051 in modes of operation "Guided fault finding", "Vehicle self-diagnosis" and "Test instruments".

Self-diagnosis is described in booklet Caddy 1996 ▸, Polo Classic 1996 ▸, Polo estate 1998 ▸, 4-speed automatic gearbox 01M self-diagnosis.

=> Repair group 01

satelettronica

32 - Torque converter

1 - Torque converter

1.1 - Torque converter

ATF pump is driven via the torque converter.

When installing the torque converter, ensure that both drive pins engage in the recesses in the ATF pump inner wheel.

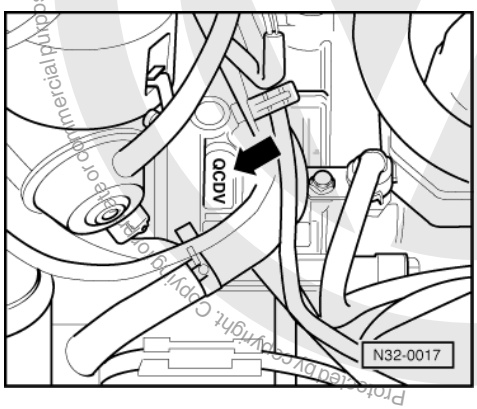

-> There are different types of torque converter, which can be identified by the code letters (arrow).

(Gearbox installed)

1.2 - Identification of torque converter

There are different types of torque converter.

Current torque converter with sleeve bearing in turbine shaft of gearbox.

New torque converter with integrated needle bearing.

Identification is by means of the code letters.

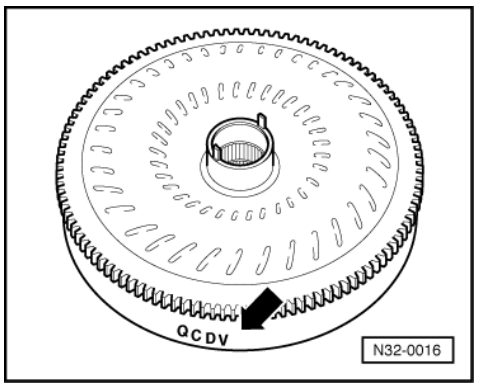

satelettronica

-> The current torque converter may only be fitted in the gearbox with a sleeve bearing in the turbine shaft. It can be identified by the fourth letter, which is either a B, C, R, T or V.

- Example -arrow- is a "V".

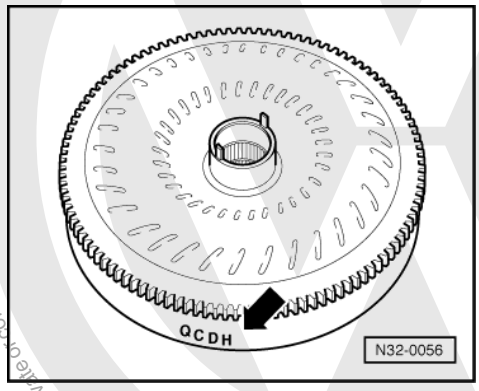

-> The new torque converter may only be fitted in the gearbox without a sleeve bearing in the turbine shaft. It can be identified by the fourth letter, which is either a D, H, or J.

- Example -arrow- is an "H".

If a new torque converter with an integrated needle bearing is installed in a gearbox with a sleeve bearing, the sleeve bearing must be removed from the turbine shaft => 18 .

1.3 - Torque converter allocation

There are two types, which are allocated according to gearbox code letters =>Page 3 .

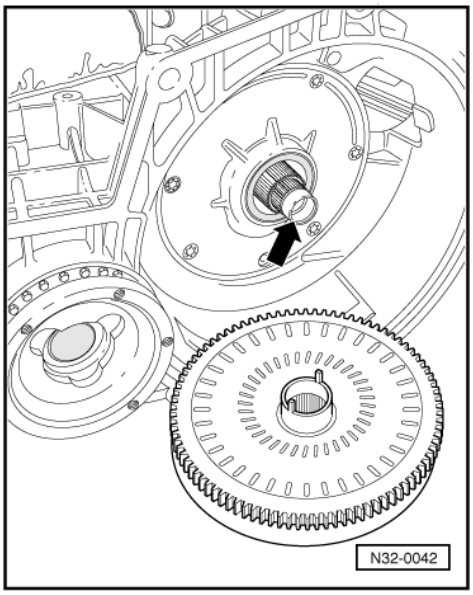

-> Current torque converter with sleeve bearing in the turbine shaft of the gearbox (arrow).

New torque converter with integrated needle bearing. If the gearbox has this type of torque converter, no sleeve bearing (arrow) may be fitted in the turbine shaft. Remove if necessary => 18 .

Copyright by Volkswagen AG. Volkswagen AG does not guarantee or accept any liability with respect to the correctness of information in this document. Copyright by Volkswagen AG. Volkswagen AG. Copyright protected by copyright. Copyright private or commercial purposes, in part or in whole, is not permitted unless authorised by Volkswagen AG.
satelettronica

1.4 - Removing sleeve bearing from turbine shaft

Place gearbox in its installation position on gearbox oil pan.

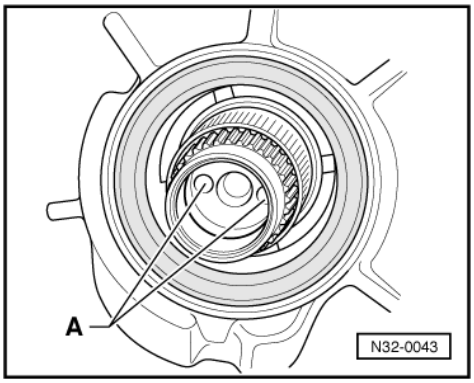

- Remove torque converter.
- -> Position holes -A- of turbine shaft in horizontal position.

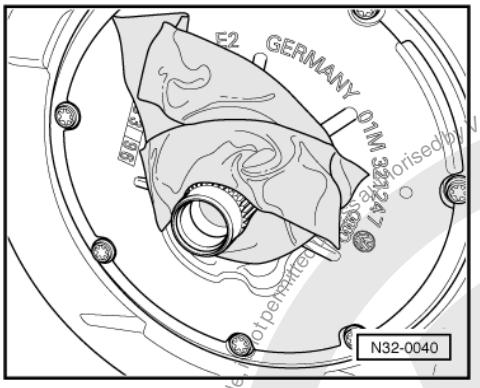

- -> Protect gearbox by carefully taping around turbine shaft and over holes.

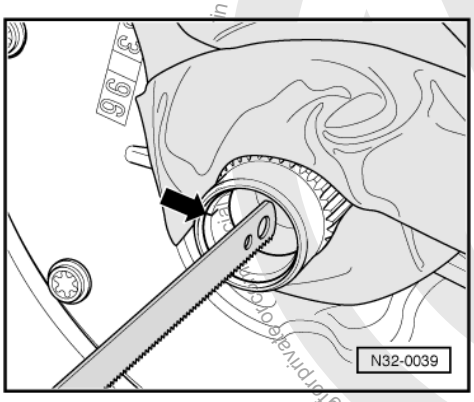

- When sawing, make sure that no filings enter the gearbox.
- -> Saw through the sleeve bearing using a saw blade. When doing this, do not saw at the thrust point of the sleeve bearing (arrow).

Protected by copyright. Copying for private or commercial purposes, in whole or in part, is not permitted unless authorised by Volkswagen AG. Volkswagen AG does not guarantee or accept any liability with respect to the correctness of information in this document. Copyright by Volkswagen AG.
satelettronica

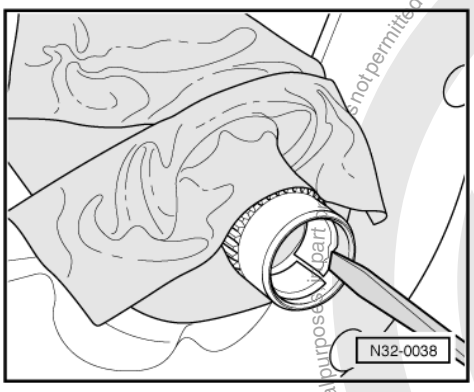

- -> Without damaging the turbine shaft, carefully lever up the split sleeve bearing using a screwdriver.
- Remove filings and sticky tape.

Now renew torque converter seal=> 19 .

1.5 - Removing and installing torque converter oil seal

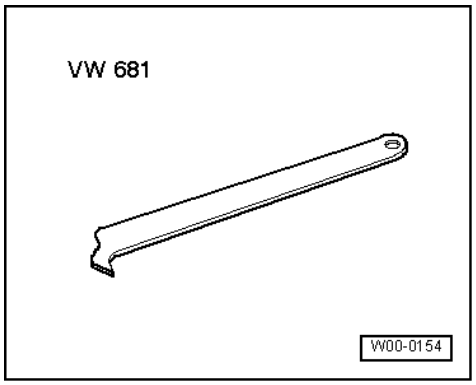

Special tools, workshop equipment, testers, measuring instruments and auxiliary items required

- VW 681 Extractor lever

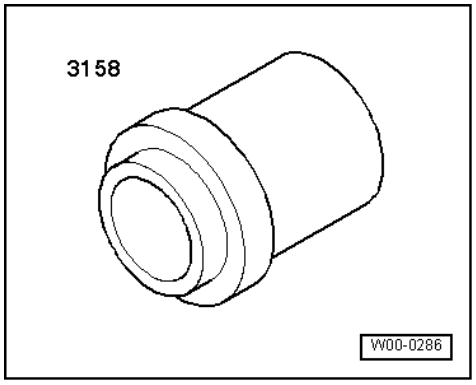

- 3158 Drift sleeve

Protected by copyright. Copying for private or commercial purposes, in part, is not permitted unless authorised by Volkswagen AG. Volkswagen AG does not guarantee or accept any liability with respect to the correctness of information in this document. Copyright by Volkswagen AG.
satelettronica

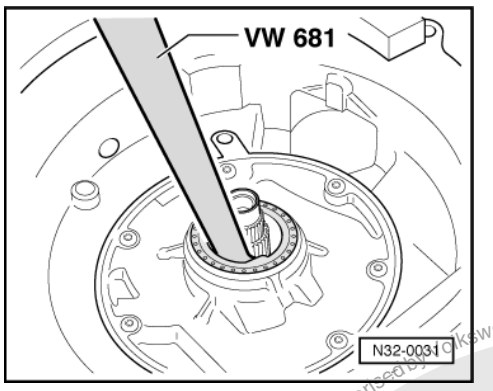

-> Removing torque converter oil seal

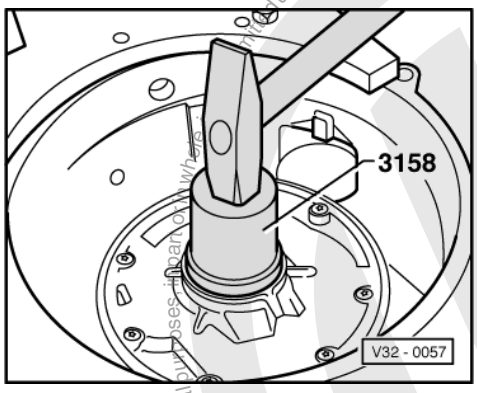

-> Driving in torque converter oil seal until flush

1.6 - Draining torque converter

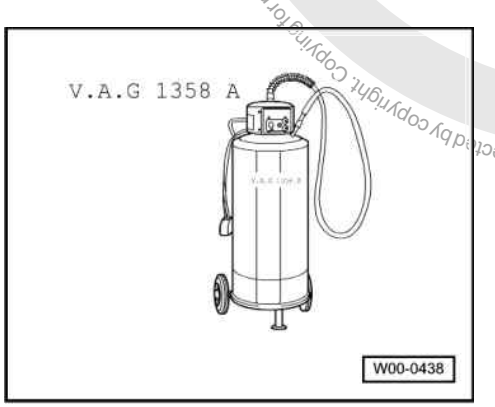

Special tools, workshop equipment, testers, measuring instruments and auxiliary items required

- V.A.G 1358 A Oil extractor
- V.A.G 1358 A/1 Oil extractor probe

Protected by copyright. Copying for private or commercial purposes, in part or in whole, is not permitted unless authorised by Volkswagen AG. Volkswagen AG does not guarantee or accept any liability with respect to the correctness of information in this document. Copyright by Volkswagen AG.
satelettronica

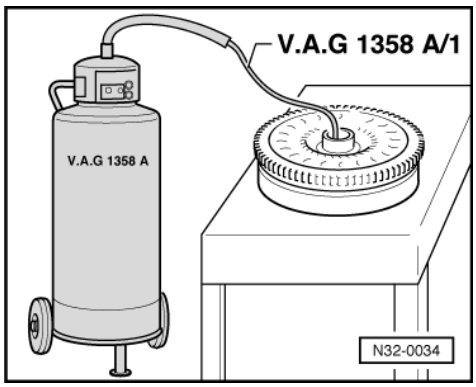

If the torque converter has become fouled by abrasion or when performing a major overhaul of the gearbox, drain the torque converter as follows:

- -> Extract ATF from torque converter using V.A.G 1358 A and probe V.A.G 1358 A/1.

1.7 - Installing torque convertor

- Fit torque converter to gearbox, when doing this turn converter until both drive pins engage in ATF pump cut-outs.

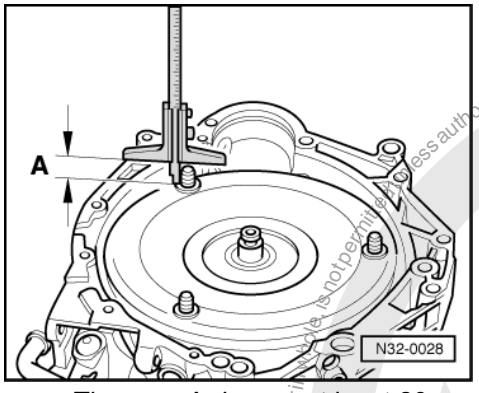

- -> The gap -A- is now at least 20 mm.

Protected by copyright. Copying for private or commercial purposes, in part or whole, is not permitted unless authorised by Volkswagen AG. Volkswagen AG does not guarantee or accept any liability with respect to the correctness of information in this document. Copyright by Volkswagen AG.
satelettronica

37 - Controls, Housing

1 - Locations of electrical/electronic components

1.1 - Locations of electrical/electronic components

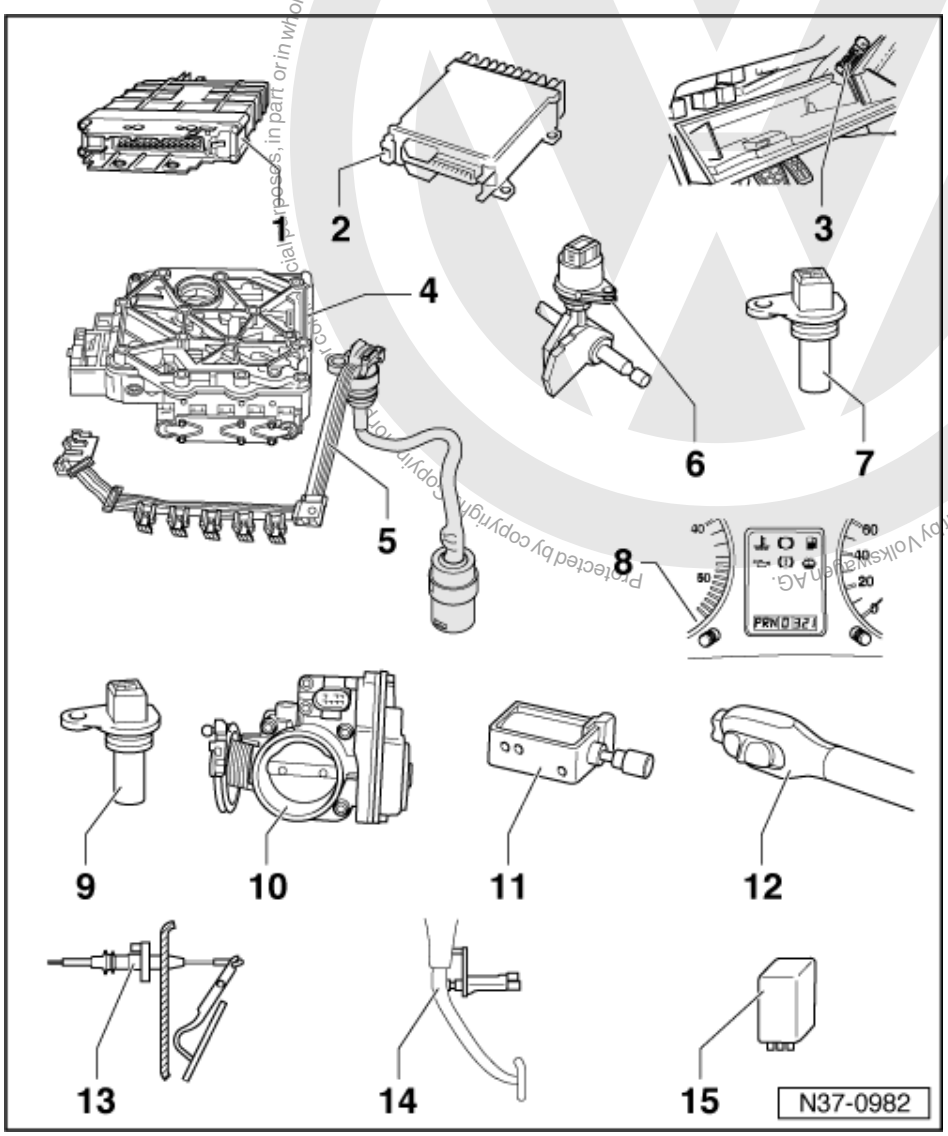

1 Automatic gearbox control unit -J217-

- Location => Fig. 1
- Removing and installing =>Fig. 2
- Checked by self-diagnosis

=> Automatic gearbox 01M self-diagnosis; Repair group 01; Performing self-diagnosis Performing self-diagnosis

- Do not renew until all mechanical, hydraulic and electrical/electronic component faults have been found and rectified => Checking gearbox, page 51

2 Engine control unit

satelettronica

- Location and removing and installing =>Fig. 3

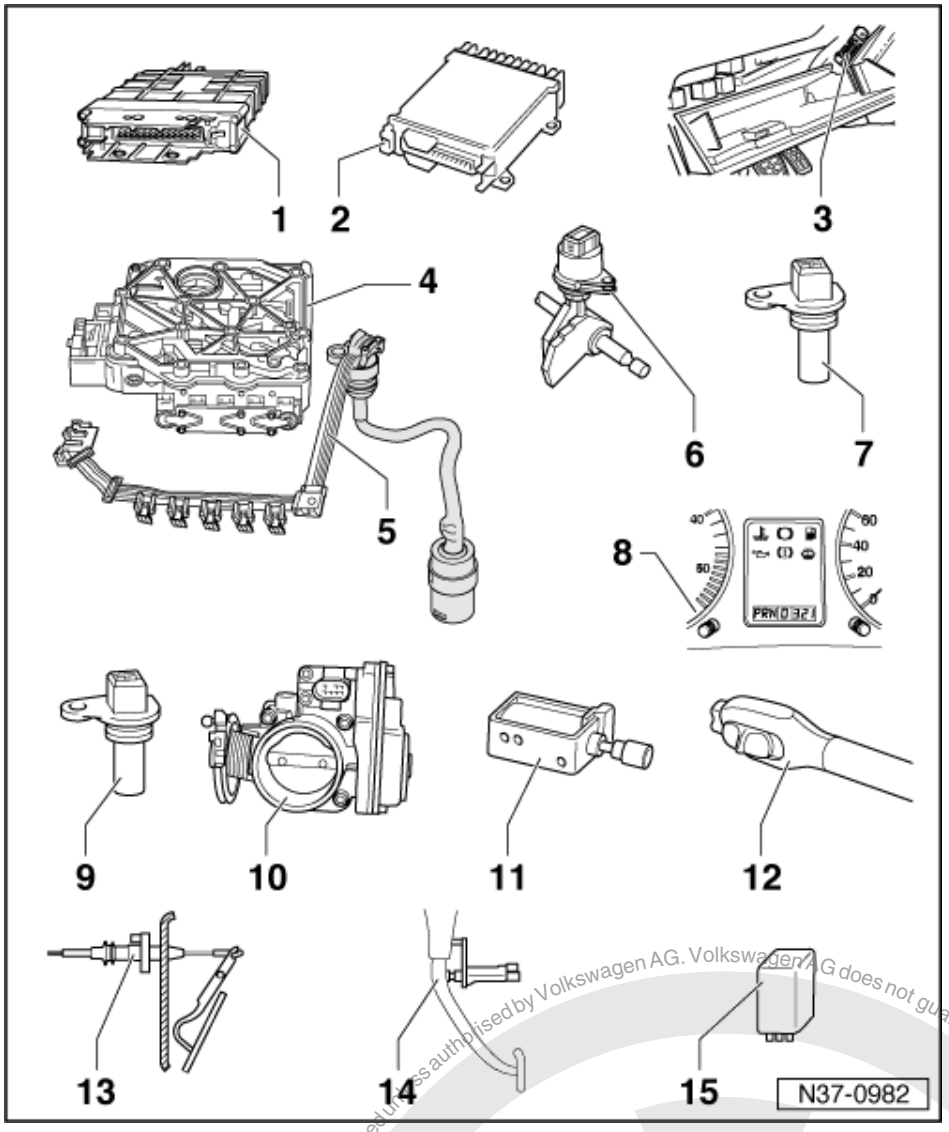

3 Diagnostic connection
- Location on vehicles up to 08.97 => fig. 5
- Location on vehicles from 09.97 to 09.99 => fig. 6
- Location on vehicles from 10.99 => fig. 7

4 Valve chest
- Location => Fig. 13
- Removing and installing
  => page 191
- The solenoid valves -N88-, -N89-, -N90-, -N91-, -N92-, -N93- and -N94- are attached to the valve chest
- The valves are checked by self-diagnosis

=> Automatic gearbox 01M self-diagnosis; Repair group 01; Performing self-diagnosis Performing self-diagnosis

5 Conductor strip with integrated gearbox oil temperature sender (ATF) -G93-
- Location => Fig. 14
- -G93- is checked by self-diagnosis

=> Automatic gearbox 01M self-diagnosis; Repair group 01; Performing self-diagnosis Performing self-diagnosis

Protected by copyright. Copyright by Volkswagen AG.
Copying for private or commercial purposes, in part or in whole, is not permitted unless authorised by Volkswagen AG. Volkswagen AG does not guarantee or accept any liability with respect to the correctness of information in this document.
satelettronica

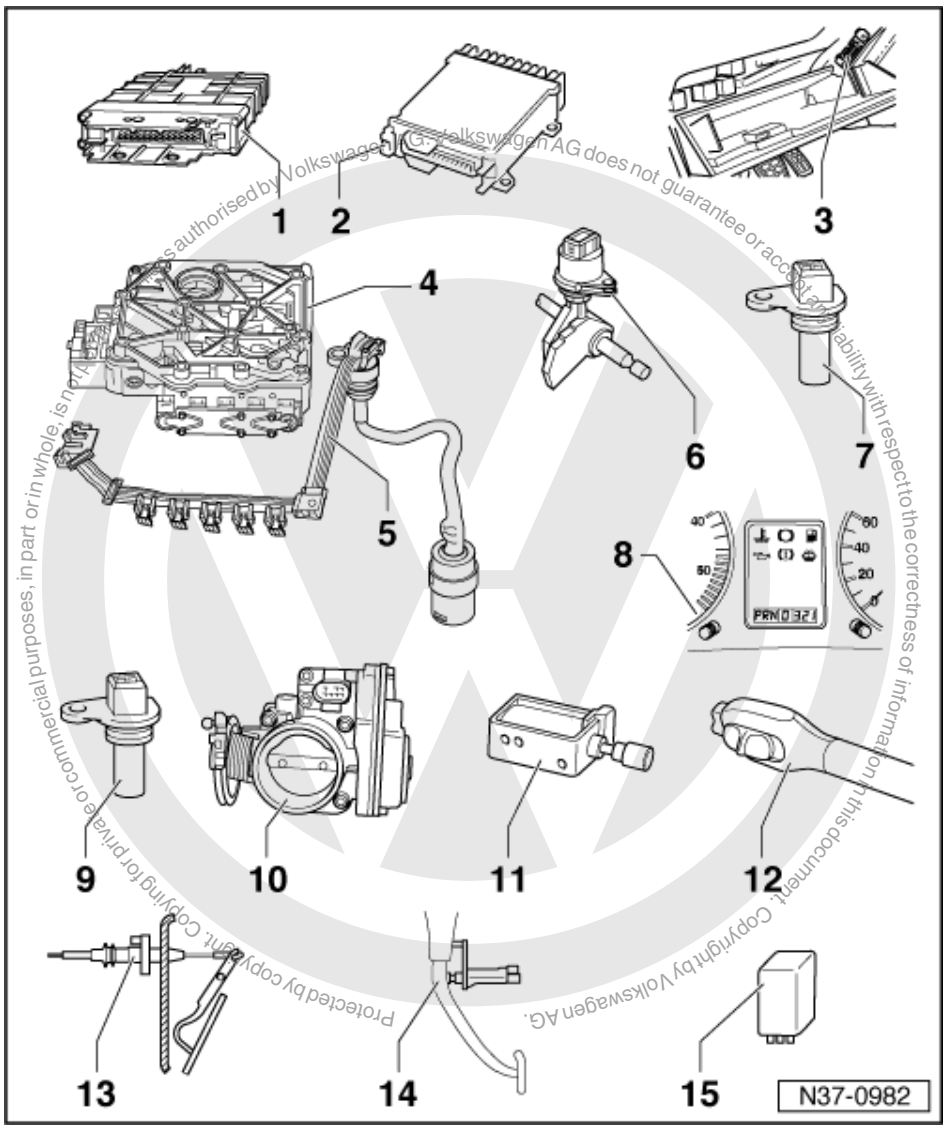

6 Multifunction switch -F125-

- Fitting location =>Fig. 15
- Removing and installing => 212 , fig. 7
- Checked by self-diagnosis

=> Automatic gearbox 01M self-diagnosis; Repair group 01; Performing self-diagnosis Performing self-diagnosis

7 Gearbox speed sender -G38-

- Fitting location =>Fig. 16
- Removing and installing => 213 , fig. 8
- The connector T2 to the wiring harness is white
- Checked by self-diagnosis

=> Automatic gearbox 01M self-diagnosis; Repair group 01; Performing self-diagnosis Performing self-diagnosis

Do not interchange connector T2 for senders -G38- and -G68-

8 Selector lever position display -Y5-

- Further information => fig. 12

satelettronica

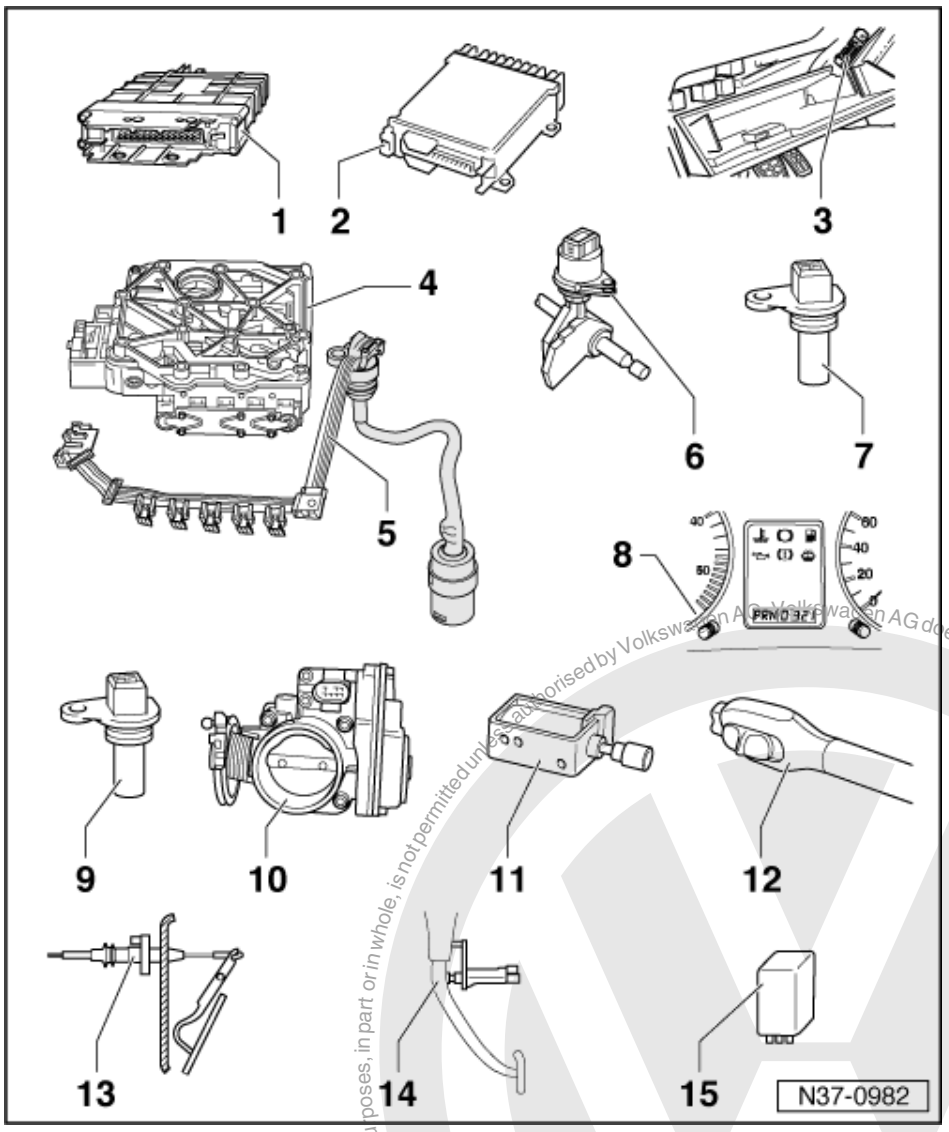

9 Road speed sender -G68-

- Fitting location=>fig. 17
- Removing and installing => page 213 , fig. 9
- The connector T2 to the wiring harness is black
- Checked by self-diagnosis

=> Automatic gearbox 01M self-diagnosis; Repair group 01; Performing self-diagnosis Performing self-diagnosis

Do not interchange connector T2 for senders -G38- and -G68-

10 Throttle valve potentiometer -G69-, or accelerator position sender -G79-

- Further information => Fig. 4
- Can be checked in self-diagnosis (signal) and during the electrical check

=> Automatic gearbox 01M self-diagnosis; Repair group 01; Performing self-diagnosis Performing self-diagnosis

Protected copyright. Copyright by Volkswagen AG.
Copyright by Volkswagen AG does not guarantee or accept any liability with respect to the correctness of information in this document.
Copying for private or commercial purposes, in part or in whole, is not permitted unless authorised by Volkswagen AG.
satelettronica

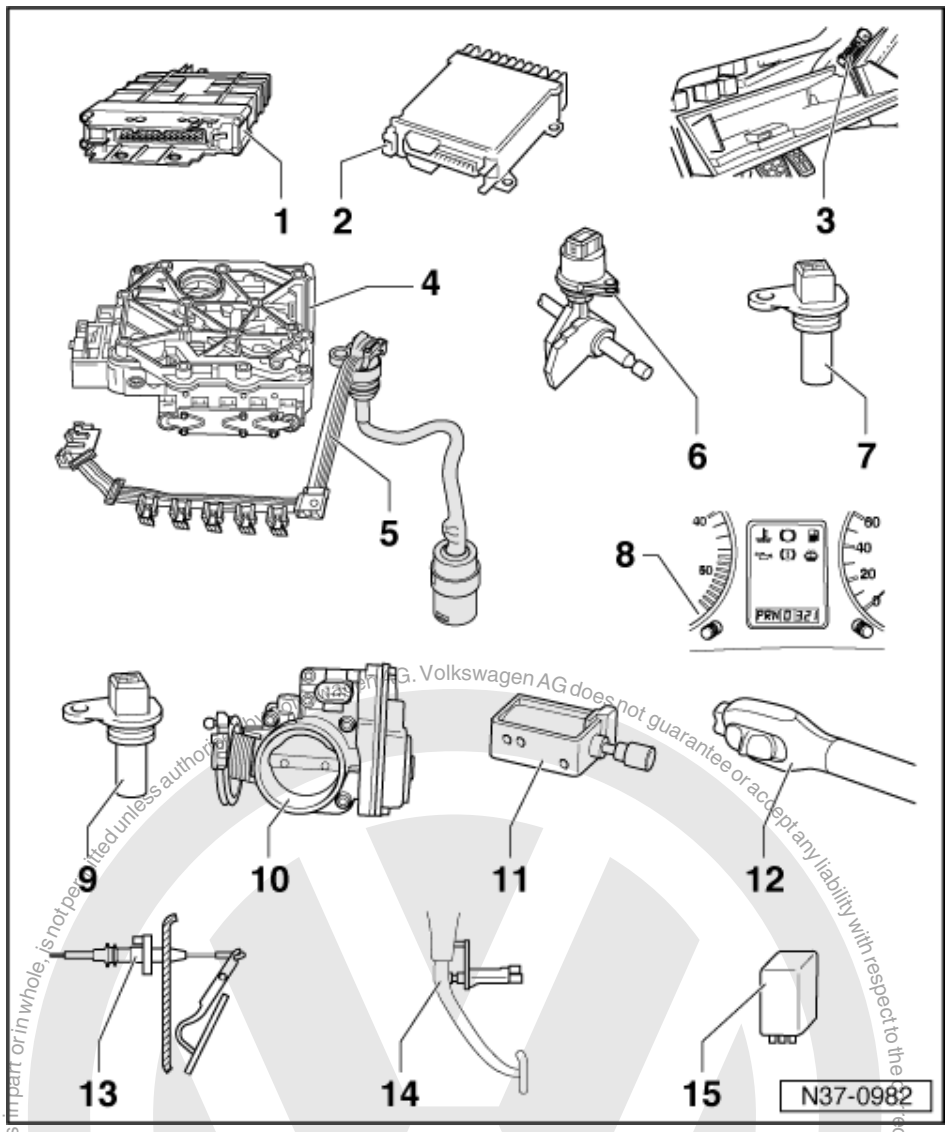

11 Solenoid for selector lever lock -N110-

- Removing and installing => 48 , - 6 -
- Can be checked in measured value block and during the electrical check

=> Automatic gearbox 01M self-diagnosis; Repair group 01; Performing self-diagnosis Performing self-diagnosis

12 Cruise control switch -E45-

- Location and removing and installing =>Fig. 11
- Can be checked in measured value block

=> Automatic gearbox 01M self-diagnosis; Repair group 01; Performing self-diagnosis Performing self-diagnosis

Protected by copyright. Copyright by Volkswagen AG.
Volkswagen AG does not guarantee or accept any liability with respect to the correctness of information in this document.
satelettronica

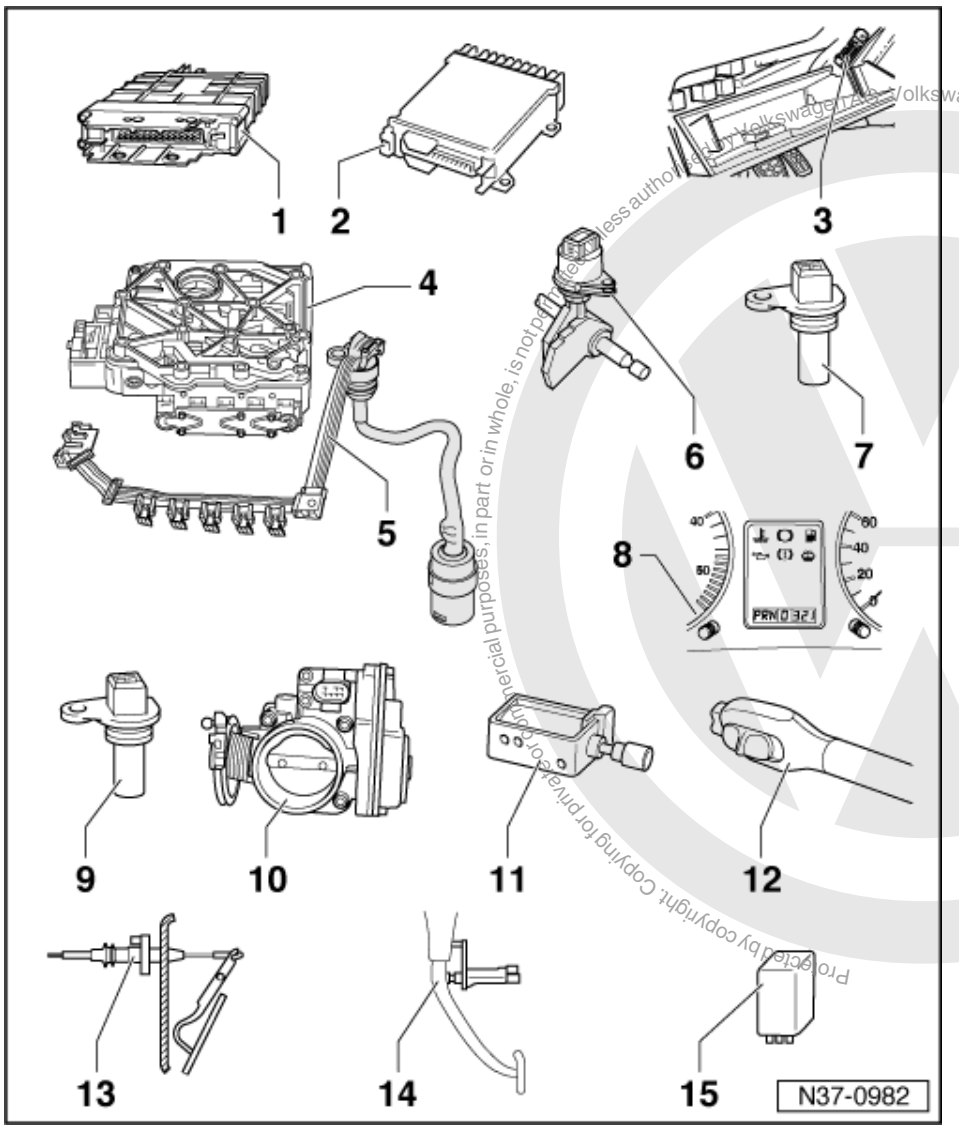

13 Kickdown switch -F8-

- Location, removing and installing => Fig. 8
- Can be checked in measured value block and during the electrical check

=> Automatic gearbox 01M self-diagnosis; Repair group 01; Gearbox: Electrical check Gearbox: Electrical check

- Not fitted in vehicles from 07.99

14 Brake light switch -F-

- Location => Fig. 9
- Can be checked in measured value block and during the electrical check

=> Automatic gearbox 01M self-diagnosis; Repair group 01; Performing self-diagnosis Performing self-diagnosis

15 Starter inhibitor relay -J207-

- Location => Fig. 10

Volkswagen AG does not guarantee or accept any liability with respect to the correctness of information in this document. Copyright by Volkswagen AG.
Protected by copyright. Copying for private or commercial purposes, in part or in whole, is not permitted unless authorised by Volkswagen AG.
satelettronica

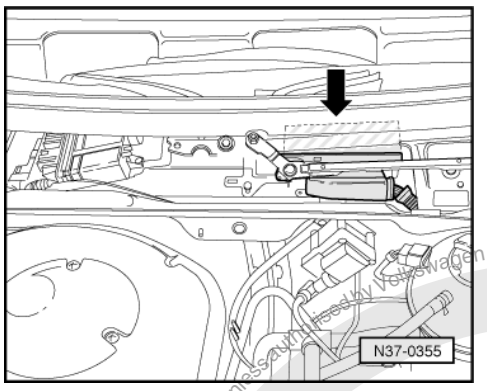

-> Fig.1 Location of automatic gearbox control unit -J217-

The control unit -arrow- is located in the plenum chamber.

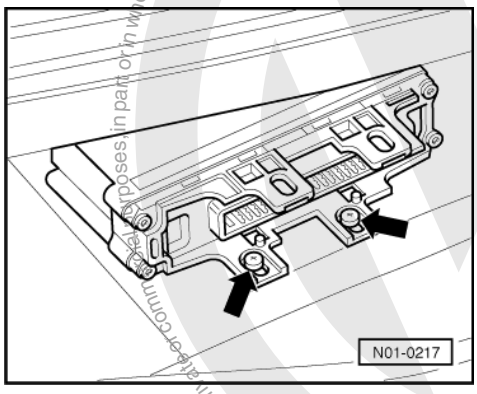

-> Fig.2 Removing and installing automatic gearbox control unit -J217-

Protected by copyright. Copyright by Volkswagen AG.
Copyright by Volkswagen AG. Volkswagen AG does not guarantee or accept any liability with respect to the correctness of information in this document.
Copyright by Volkswagen AG. Volkswagen AG does not permitted unless authorised by Volkswagen AG.
satelettronica

Removing control unit

- Switch off ignition, open bonnet.
- Remove wiper arms and cowl panel:

=> Electrical system; Repair group 94; Windscreen wiper system; Removing and installing windscreen wiper system Windscreen wiper system Removing and installing windscreen wiper system

- Partially remove/install wiper rods.
- Remove engine control unit.

Location: The control unit is located in plenum chamber.

=> Repair group 23; of the respective engine code of the respective engine code

=> Repair group 24; of the respective engine code of the respective engine code

- Release multi-pin connector and pull off control unit.
- Remove screws -arrows-.
- Remove control unit.

Installing control unit

Installation is performed in the reverse order.

If the engine or gearbox control unit is renewed, the system must be reset.

- Perform self-diagnosis and initiate basic setting.

=> Automatic gearbox 01M self-diagnosis; Repair group 01; Performing self-diagnosis; Initiating basic setting Performing self-diagnosis Initiating basic setting

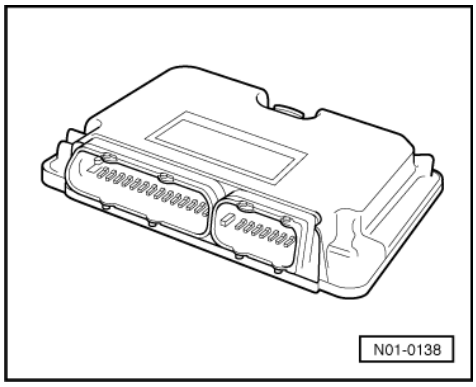

-> Fig.3 Engine control unit

Location: The control unit is located in plenum chamber.

Removing and installing control unit

=> Repair group 23; of the respective engine code of the respective engine code

=> Repair group 24; of the respective engine code of the respective engine code

If the engine or gearbox control unit is renewed, the system must be reset.

- Perform self-diagnosis and initiate basic setting.

=> Automatic gearbox 01M self-diagnosis; Repair group 01; Performing self-diagnosis; Initiating basic setting Performing self-diagnosis Initiating basic setting

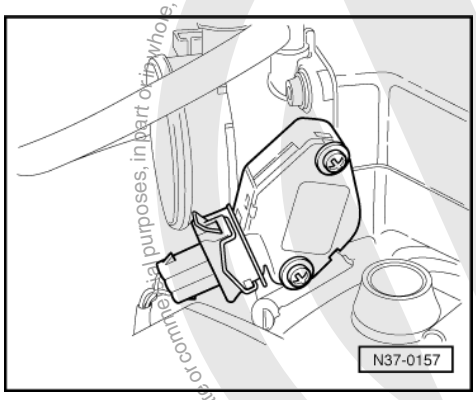

-> Fig.4 Throttle valve potentiometer -G69- or throttle position sender -G79-

Locations:

The potentiometer is a component part of the throttle valve control part -J338-. It is located on the throttle valve housing (engine).

satelettronica

The throttle position sender -G79- is part of the electronic power control (EPC) and can be found on the foot pedal.

Checking and adjusting or removing and installing throttle valve potentiometer

On vehicles from 07.99, the switch signal comes from the data bus.

=> Repair group 23; of the respective engine code of the respective engine code

=> Repair group 24; of the respective engine code of the respective engine code

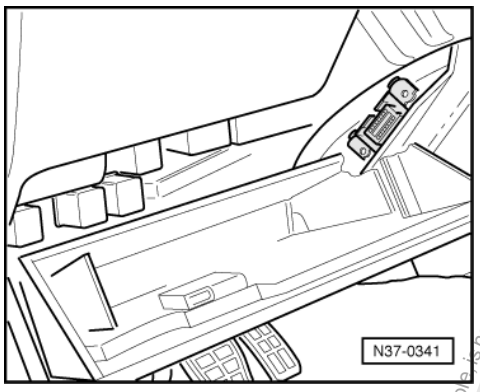

-> Fig.5 Diagnosis connection for vehicles to 08.97

The self-diagnosis connection is located behind the shelf on the driver's side.

- Open and unhook shelf on driver's side.

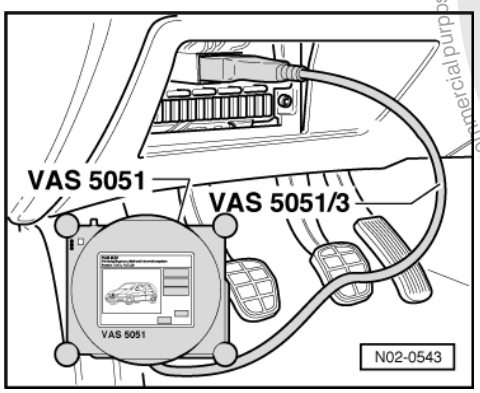

-> Fig.6 Diagnosis connection on vehicles from 09.97 to 09.99

The self-diagnosis connection is located on the fuse strip in front left footwell

- Remove cover in front of fuse strip

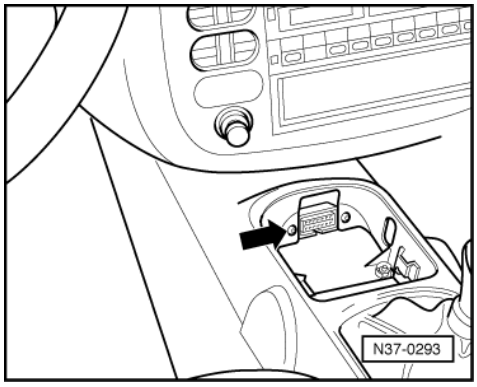

Protected by copyright. Copying for private or commercial purposes, in part or in whole, is not permitted unless authorised by Volkswagen AG. Volkswagen AG does not guarantee or accept any liability with respect to the correctness of information in this document. Copyright by Volkswagen AG.
satelettronica

-> Fig.7 Diagnosis connection for vehicles from 10.99

Location: The diagnostic connection -arrow- is located in centre console.

- Lever cover or ashtray housing out from centre console.

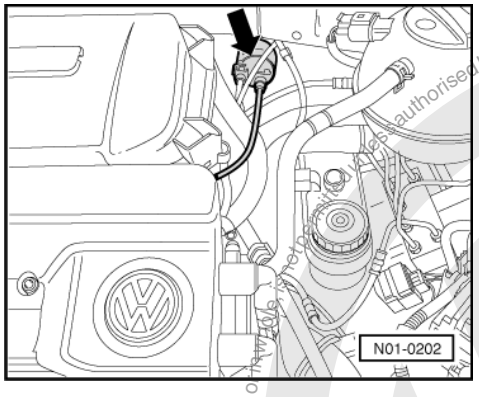

-> Fig.8 Kickdown switch -F8- (only on vehicles without data bus)

Location: Kickdown switch (arrow) is integrated into accelerator cable and is located on bulkhead in engine compartment.

Removing and installing kickdown switch

- To remove kickdown switch, first remove accelerator cable. After reinstalling kickdown switch, reinstall and adjust cable.

=> Repair group 20; Servicing accelerator mechanism; Adjusting accelerator cable Servicing accelerator mechanism Adjusting accelerator cable

On vehicles from 07.99, the switch signal comes from the data bus.

These vehicles have no switch.

The signal is generated in the "electronic accelerator" (EPC).

The kick-down switch signal is transmitted from the engine control unit to the automatic gearbox control unit.

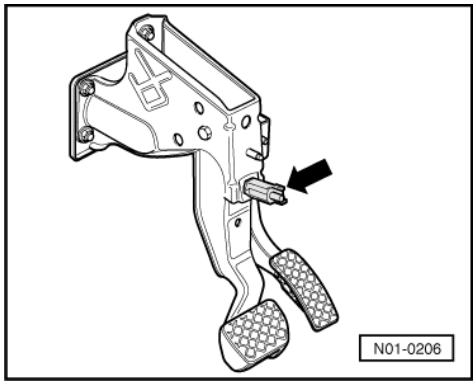

-> Fig.9 Brake light switch -F-

Location: Brake light switch (arrow) is located on pedal cluster.

Protected by copyright. Copyright by Volkswagen AG.
Copyright by Volkswagen AG. Volkswagen AG does not guarantee or accept any liability with respect to the correctness of information in this document. Copying for private or commercial purposes, in part or in whole, is not permitted unless authorised by Volkswagen AG.
satelettronica

Removing and installing brake light switch

=> Running gear self-diagnosis for ABS; Repair group 01; Electrical/electronic components and Fitting locations. Electrical/electronic components and Fitting locations.

On vehicles from 07.99, the switch signal comes from the data bus.

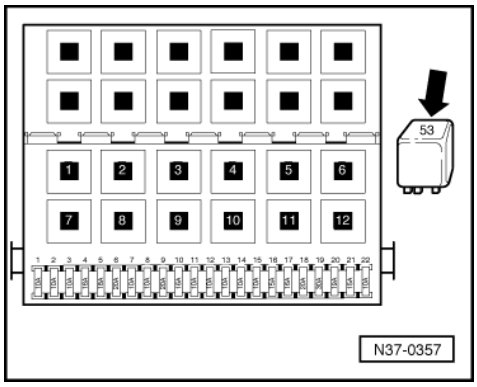

-> Fig.10 Starter inhibitor relay -J207-

Location: The relay is located on relay carrier behind the fuse holder below the dash panel.

Relay is marked with number "53" (arrow).

Assignment

=> "Current flow diagrams, Electrical fault finding and Fitting locations" binder, Caddy, Polo Classic, Polo estate

- The relay can be identified via connecting cable colours.

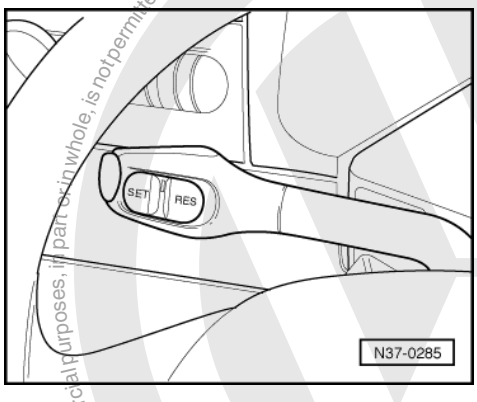

-> Fig.11 Cruise control system switch -E45-

Location: Cruise control switch is located on steering column switch.

Removing and installing cruise control switch

=> Electrical system; Repair group 94

or

=> Electrical system; Repair group 96

Protected by copyright. Copying for private or commercial purposes, in part or in whole, is not permitted unless authorised by Volkswagen AG. Volkswagen AG does not guarantee or accept any liability with respect to the correctness of information in this document. Copyright by Volkswagen AG.

satelettronica

On vehicles from 07.99, the switch signal comes from the data bus.

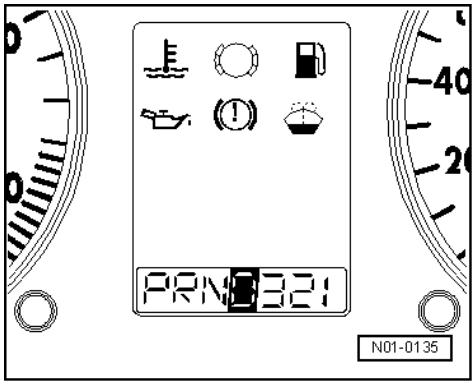

-> Fig.12 Selector lever position display -Y5-

Location: Selector lever position display is located in combi-instrument.

Removing and installing selector lever position display.

=> Electrical system; Repair group 90; Dash panel insert; Removing and installing dash panel insert Dash panel insert Removing and installing dash panel insert

In emergency running mode with the control unit functioning, all segments in the selector lever position display in the dash panel will light up.

In emergency running with a defective control unit there will be no display in the selector lever position display.

On vehicles with data bus, the display is controlled by the data bus diagnosis interface via the gearbox control unit.

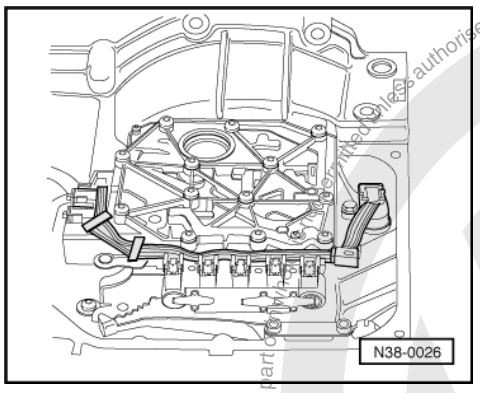

-> Fig.13 Valve chest

Location: The valve chest is bolted to the underside of gearbox housing inside the sump.

The solenoid valves -N88-, -N89-, -N90-, -N91-, -N92-, -N93- and -N94- are attached to the valve chest.

Removing and installing valve chest

=>Page 191

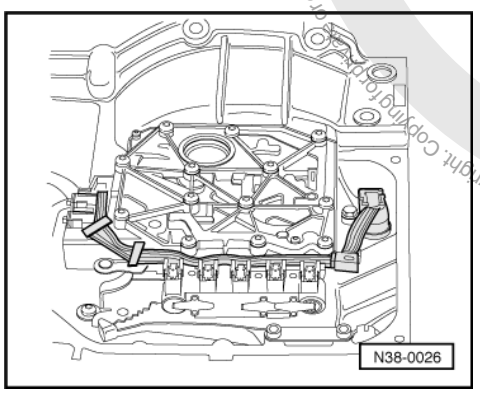

Protected by copyright. Copying for private or commercial purposes, in part or in whole, is not permitted unless authorised by Volkswagen AG. Volkswagen AG does not guarantee or accept any liability with respect to the correctness of information in this document. Copyright by Volkswagen AG.
satelettronica

-> Fig. 14 Conductor strip with integrated gearbox oil temperature sender (ATF) -G93-

Location: The conductor strip is located in the oil pan on the valve chest.
The conductor strip can be changed with gearbox installed without removing the valve chest.
Do not kink or damage the conductor strip.

Removing and installing conductor strip

=>Page 191

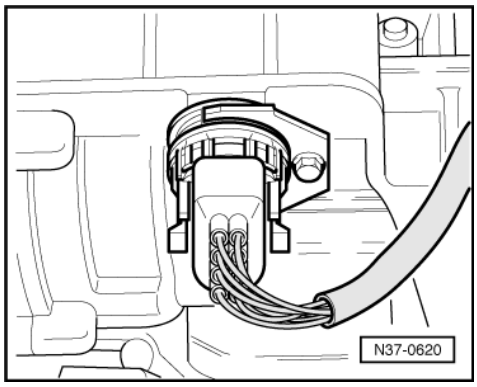

-> Fig.15 Multi-function switch -F125-

Location: The multi-function switch is located on rear of gearbox.

Removing and installing multi-function switch

=> 212 , fig. 7

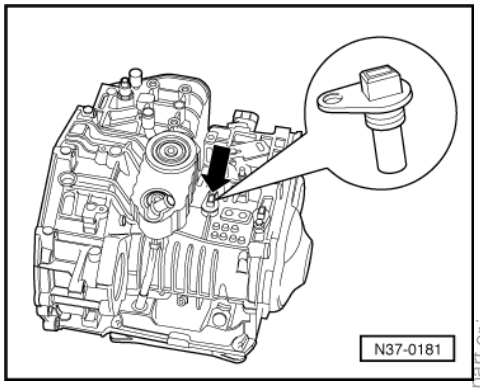

-> Fig.16 Gearbox speed sender -G38-

Location: The gearbox speed sender -arrow- is located on top of gearbox.

Removing and installing gearbox speed sender

=> 213 , fig. 8

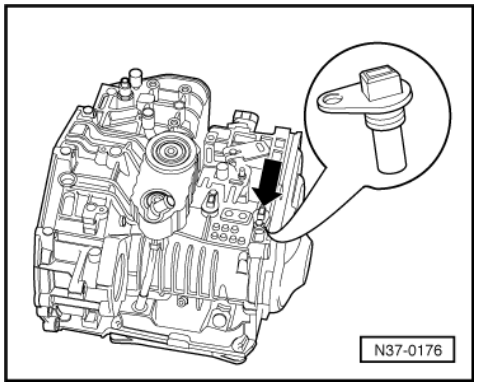

Protected by copyright. Copying for private or commercial purposes, in part or in whole, is not permitted unless authorised by Volkswagen AG. Volkswagen AG does not guarantee or accept any liability with respect to the correctness of information in this document. Copyright by Volkswagen AG.
satelettronica

-> Fig.17 Road speed sender -G68-

Location: The road speed sender -arrow- is located on top of gearbox.

Removing and installing road speed sender

=> 213 , fig. 9

2 - Servicing gear change mechanism

2.1 - Servicing gear change mechanism

Warning! Before working on engine when it is running, move selector lever into position "P" and apply handbrake.

2.2 - Checking shift mechanism

When the selector lever is in positions "1", "2", "3", "D" or "R", do not operate starter motor.

On RHD vehicles, the starter motor may only be operated in selector lever positions "P" and "N", providing the selector lever handle lock button is not pressed.

If selector lever position "N" is selected at speeds greater than 5 km/h, the selector lever lock solenoid must not engage and block the selector lever. Selector lever can be shifted in a driving gear.

If selector lever position "N" is selected at speeds less than 5 km/h (almost stationary), the selector lever lock solenoid should engage after approx. 1 second. Selector lever can only be shifted out of position "N" once foot brake has been depressed.

Selector lever in "P" position and ignition switched on:

- Brake pedal not depressed:

  Selector lever is locked and cannot be shifted out of position "P" with button pressed. Selector lever lock solenoid blocks selector lever.

- Brake pedal depressed:

  Selector lever lock solenoid releases selector lever. It is possible to shift into a driving gear. While slowly shifting selector lever from "P" to "1", check whether the display in the dash panel insert shows the correct selector lever position.

Selector lever in "N" position and ignition switched on:

- Brake pedal not depressed:

  Selector lever is locked and cannot be shifted out of "N" position with button pressed. Selector lever lock solenoid blocks selector lever.

- Brake pedal depressed:

  Solenoid for selector lever lock releases selector lever. It is possible to shift into a driving gear.

Protected by copyright. Copyright by Volkswagen AG. Volkswagen AG does not guarantee or accept any liability with respect to the correctness of information in this document. Copying for private or commercial purposes, in part or in whole, is not permitted unless authorised by Volkswagen AG.
satelettronica

2.3 - Checking and adjusting selector lever cable

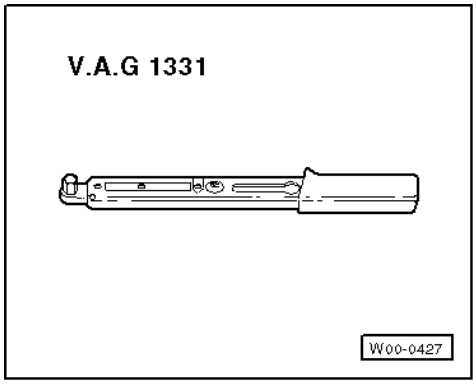

Special tools, workshop equipment, testers, measuring instruments and auxiliary items required

- V.A.G 1331 Torque wrench

Checking

- Shift selector lever into "P" position.
- Remove selector lever cable combi-bolt from lever/selector shaft.
- Move selector lever from "P" to "1".

• Selector lever mechanism and selector lever cable must move freely. If necessary renew selector lever cable or service selector lever mechanism.

Always renew selector lever locking washer at gearbox lever after dismantling.

Adjusting

- Selector lever in "P" position.
- Loosen selector lever cable combi-bolt on selector shaft lever.
- Bring selector shaft lever in position "P" on gearbox. Locking lever must engage in park lock wheel, both front wheels are blocked (cannot be turned together in a direction).
- Tighten selector lever cable combi-bolt on selector shaft lever => 40 , 19 -combi-bolt.

Protected by copyright. Copyright by Volkswagen AG. Volkswagen AG does not guarantee or accept any liability with respect to the correctness of information in this document. Copyright by Volkswagen AG. Reproduction, in part or whole, is not permitted unless authorised by Volkswagen AG.
satelettronica

2.4 - Dismantling and assembling selector mechanism

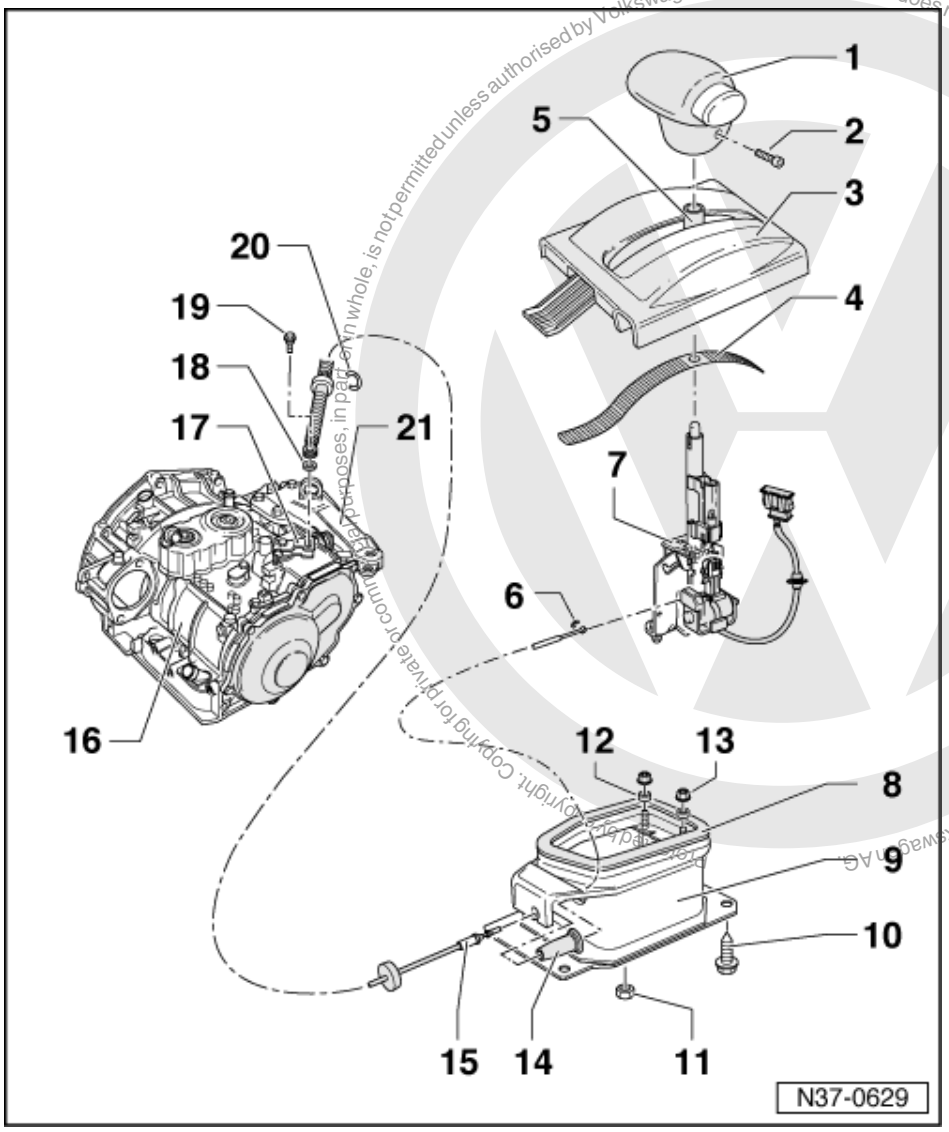

Volkswagen AG. Volkswagen AG does not guarantee or accept any liability with respect to the correctness of information in this document. Copyright by Volkswagen AG. Copyright. Copying for private or commercial purposes, in part or in whole, is not permitted unless authorised by Volkswagen AG.

satelettronica

Lubricate bearing points and sliding surfaces with polyurea grease ET No. G 052 142 A2.

1 Selector lever handle
- Note various versions => 42

2 Set screw, 1.5 Nm

3 Cover
- With selector indicator

4 Cover strip
- Insert into cover -Fig. 3 -

5 Protective sleeve for selector lever

6 Locking washer
- Removing and installing => Page 44

Protected by copyright. Copying for private or commercial purposes, in part or in whole, is not permitted unless authorised by Volkswagen AG. Volkswagen AG does not guarantee or accept any liability with respect to the correctness of information in this document. Copyright by Volkswagen AG.

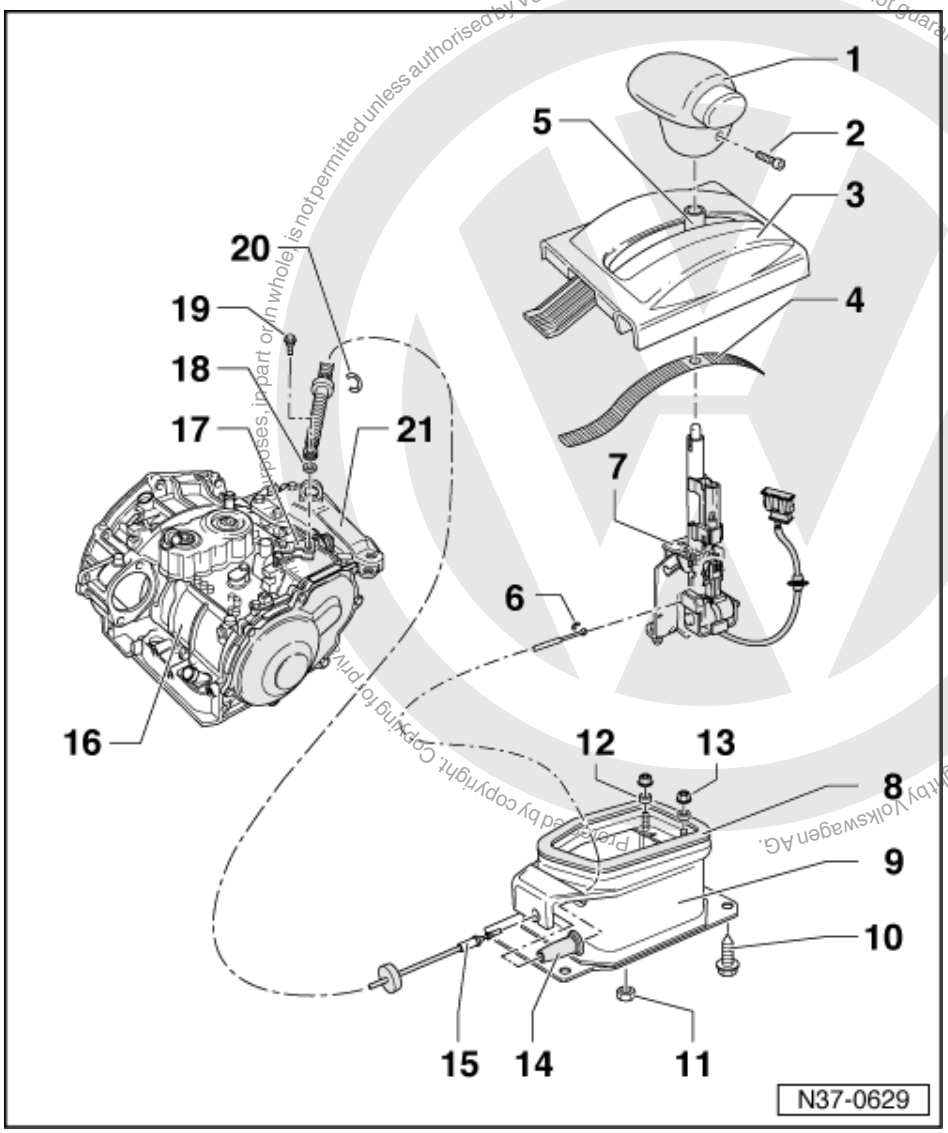

7 Selector lever

- To remove selector lever, catalyst and lower protective plate must be removed and front protective plate removed and pushed forward.
- Removing => fig. 2
- Securing wiring harness on selector lever housing => fig. 3

8 Gasket

9 Selector lever housing

- Need not be removed to replace selector lever cable or individual parts of selector mechanism
- Removing => Fig. 2

10 Combi-bolt, 25 Nm

- Qty. 4

satelettronica

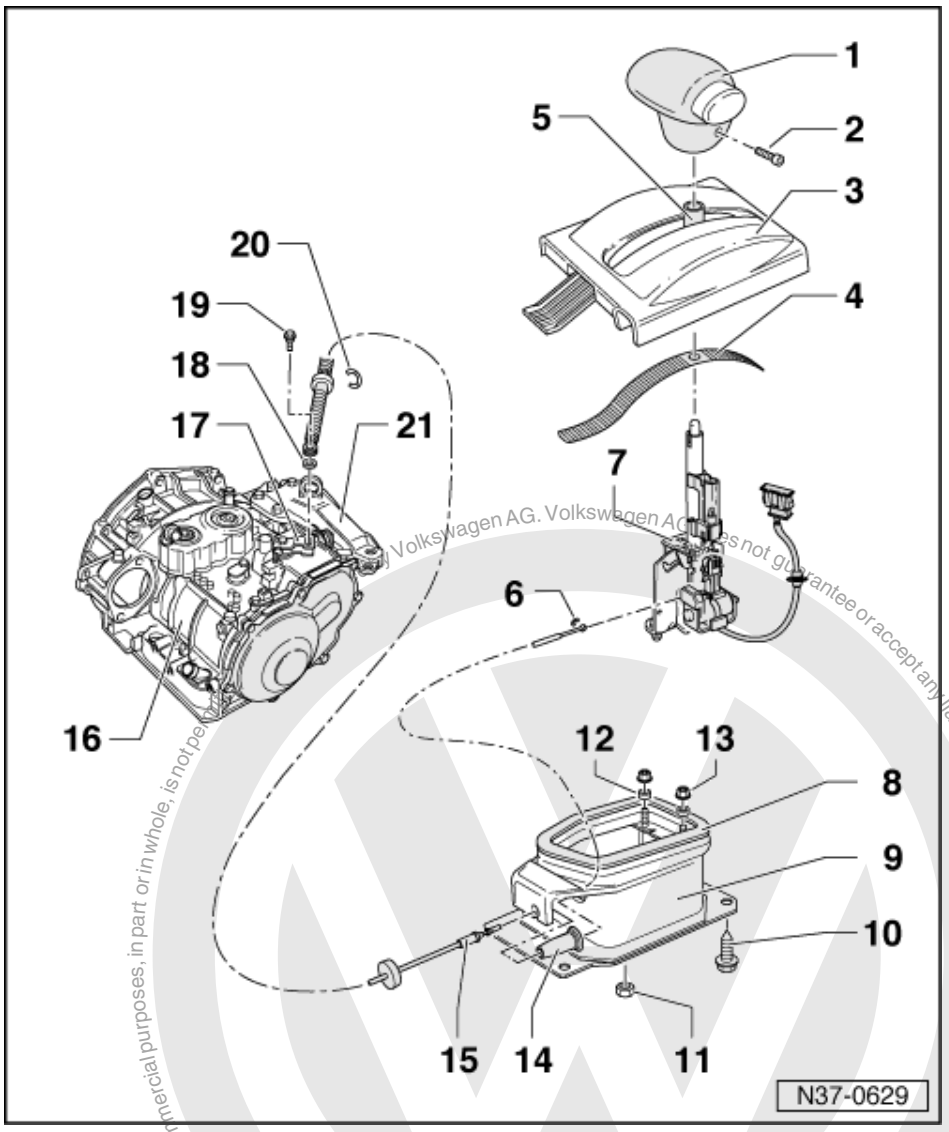

11 Nut, 15 Nm
- Qty. 3
- For selector lever to selector lever housing
- Always renew

12 Distance piece

13 Nuts
- To secure central console

14 Protective sleeve
- Insert into selector lever housing before attaching selector lever cable =>Fig. 4

15 Selector lever cable
- Do not bend or kink , lightly grease cable eyelet and cable ends before installing
- Removing and installing => Page 44
- Adjusting => Page 36

16 Gearbox

Protected by copyright. Copying for private or commercial purposes, in part or in whole, is not permitted unless authorised by Volkswagen AG. Volkswagen AG does not guarantee or accept any liability with respect to the correctness of information in this document. Copyright by Volkswagen AG.
satelettronica

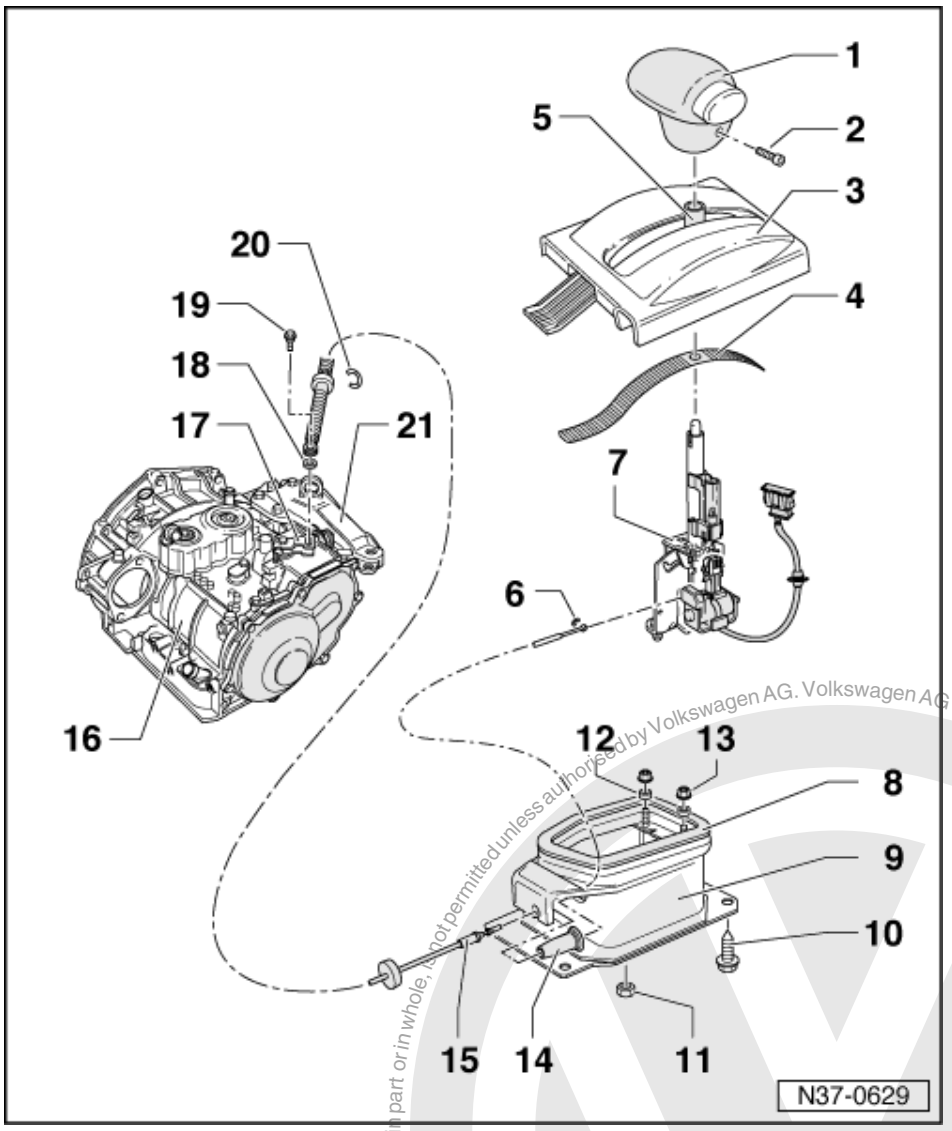

17 Lever
- For selector shaft

18 Washer

19 Combi-bolt, 25 Nm

20 Locking washer
- For selector lever cable
- Always renew

21 Console
- With anchorage for selector lever cable

Protected by copyright. Copyright by Volkswagen AG.
Copyright by Volkswagen AG. Volkswagen AG does not guarantee or accept any liability with respect to the correctness of information in this document.
Copying for private or commercial purposes, in part or in whole, is not permitted unless authorised by Volkswagen AG.
satelettronica

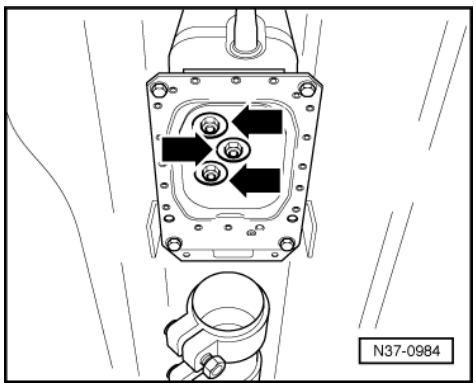

-> Fig.1 Removing selector lever

- Remove selector lever handle => 42 .
- Remove central console.

=> General body repairs, interior; Repair group 68; Compartments, covers and trims; Removing and installing centre console Compartments, covers and trims Removing and installing centre console

- Remove nuts -arrows- from selector lever housing.
- Pull selector lever upwards out of selector lever housing.

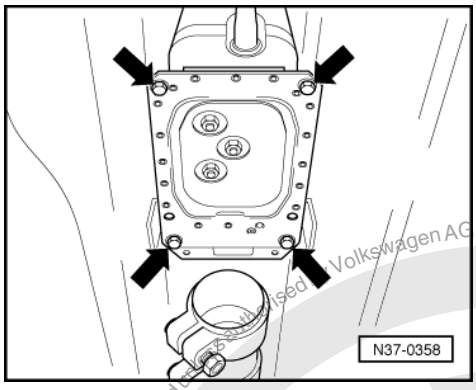

-> Fig.2 Removing selector lever housing

- Remove selector lever handle => 42 .
- Remove central console.

=> General body repairs, interior; Repair group 68; Compartments, covers and trims; Removing and installing centre console Compartments, covers and trims Removing and installing centre console

- Remove lower protective plate.
- Separate exhaust system at front of catalyst.
- Remove front protective plate and bolts -arrows-.

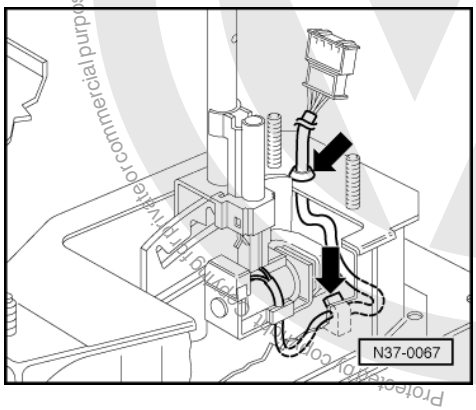

Volkswagen AG. Volkswagen AG does not guarantee or accept any liability with respect to the correctness of information in this document. Copyright by Volkswagen AG.
Protected by copyright. Copying for private or commercial purposes, in part or in whole, is not permitted unless authorised
satelettronica

-> Fig.3 Securing wiring harness to selector lever housing

- Press wiring harness into clips and into selector lever housing -arrows-.

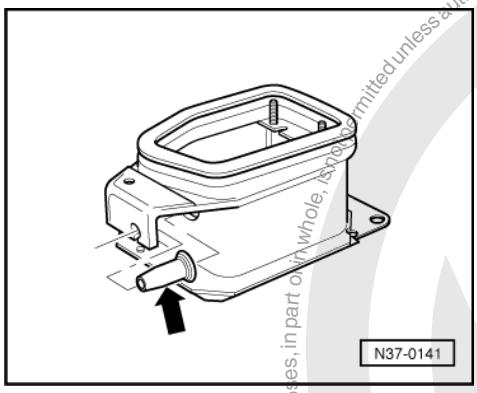

-> Fig.4 Insert boot in selector lever housing

- Fit boot -arrow- before installing the selector lever cable.

2.5 - Removing and installing selector lever handle

There are various handles which are removed and installed in different ways.

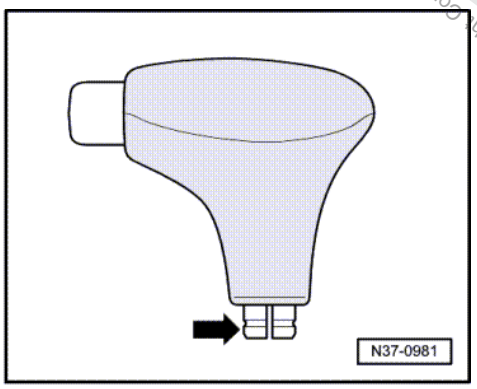

- Slide the sleeve on the selector lever downwards slightly always before starting assembly work.
- -> Check the colour of the plastic part in the handle -arrow-.

Colour is black: Removing and installing => page 43 .

Colour is red-brown: this handle can replace the handle with the black plastic part.

Removing

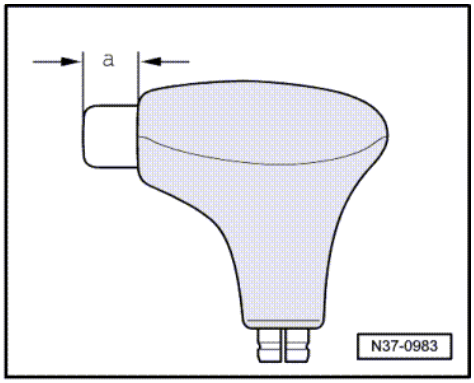

Protected by copyright. Copyright by Volkswagen AG. Volkswagen AG does not guarantee or accept any liability with respect to the correctness of information in this document. Copyright by Volkswagen AG. Reproduction, in part or in whole, is not permitted unless authorised by Volkswagen AG for commercial purposes or private or commercial purposes.
satelettronica

- Pull upwards on handle, do not press button when doing this.

If the button is inadvertently pressed, then blow outwards again carefully with compressed air.
- -> Ensure always that the button is projecting at least 10 mm -a- when installing.

While doing so, slowly pull the button by hand past the palpable pressure point so that it won't fall back again.
- Push the handle onto the selector lever to install.

Handle with black plastic part

Removing

- Set selector lever in position "3".

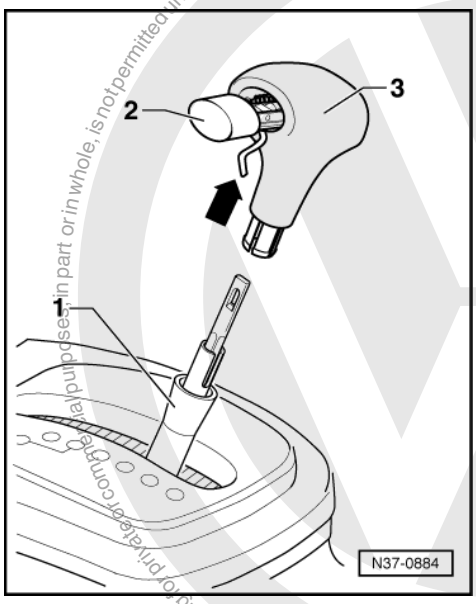

- -> Slide sleeve -1- downwards.
- Pull the button -2- out of handle -3- just enough that the pull lever -arrow- hangs downwards.
- Now pull the handle off the selector lever.

Installing

- Set selector lever in position "3".

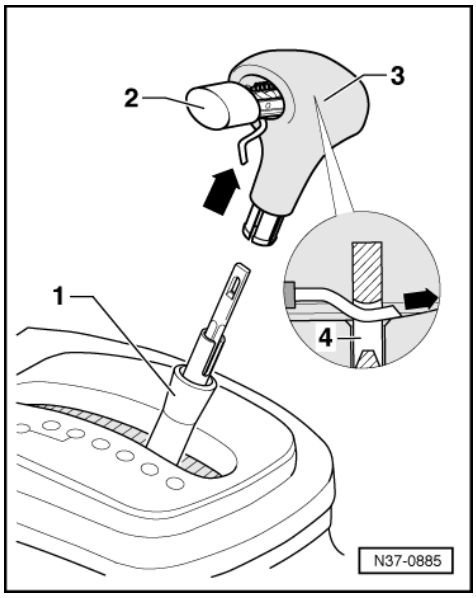

Protected by copyright. Copying for private or commercial purposes, in part or in whole, is not permitted unless authorised by Volkswagen AG. Volkswagen AG does not guarantee or accept any liability with respect to the correctness of information in this document. Copyright by Volkswagen AG.
satelettronica

- -> Pull the button -2- out of handle -3- just enough that the pull lever -arrow- hangs downwards.
- Now press the handle on selector lever onto stop.

  Installation position: Button points to driver.

- Pull button out slightly and guide the pull lever -arrow- into the handle.
- Press the button so that the pull lever engages in the pull rod -4-.

  The button must now spring back onto stop.

- Slide the sleeve -1- upwards.
- Set selector lever in position "P".

Removing and installing handle with screw

- Shift selector lever into "P" position.

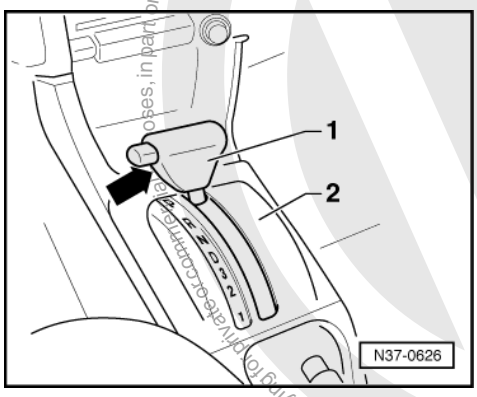

- -> Loosen set screw -arrow-.
- Pull off handle -1- upwards.

Installing

  Installation position: Button points to driver.

- Now press handle -1- onto selector lever to stop.
- Tighten set screw -arrow- => 37 , 2 -set screw.

2.6 - Removing and installing selector lever cable

Special tools, workshop equipment, testers, measuring instruments and auxiliary items required

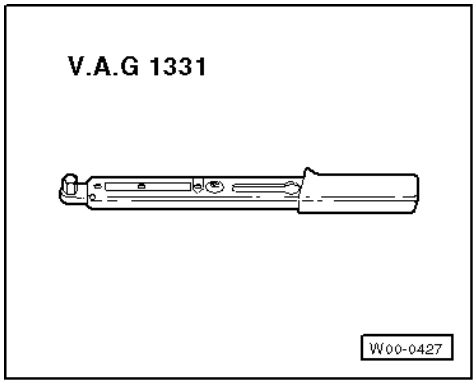

- V.A.G 1331 Torque wrench

Protected by copyright. Copying for private or commercial purposes, in part or in whole, is not permitted unless authorised by Volkswagen AG. Volkswagen AG does not guarantee or accept any liability with respect to the correctness of information in this document. Copyright by Volkswagen AG.
satelettronica

Additional information

- Workshop manual Caddy 1996 ‣, Polo Classic 1996 ‣, Polo estate 1998 ‣ Engine, mechanics
- Workshop manual Caddy 1996 ‣, Polo Classic 1996 ‣, Polo estate 1998 ‣ General body repairs, interior

Removing

- Shift selector lever into "P" position.
- Remove selector lever cable from selector shaft lever.
- Unclip circlip for selector lever cable at support bracket on gearbox and remove selector lever cable.

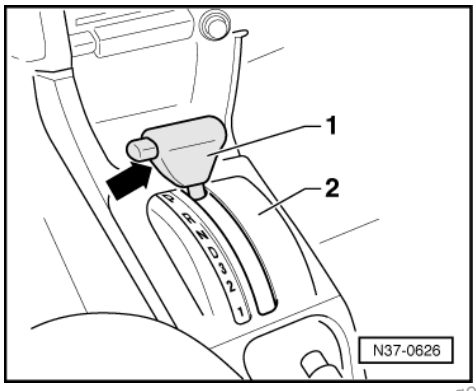

- -> Loosen set screw -arrow-.
- Pull off handle -1- upwards.
- Remove cover -2- with cover strip.
- Pull up handbrake lever.

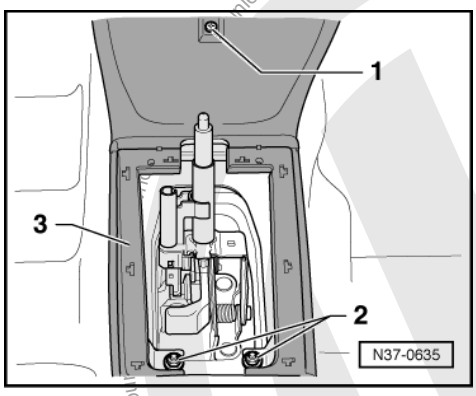

- -> Remove screw -1-.
- Remove nuts -2-.
- Remove centre console -3-.

=> General body repairs, interior; Repair group 68; Compartments, covers and trims; Removing and installing centre console Compartments, covers and trims Removing and installing centre console

- Pull circlip for securing selector lever cable to selector lever housing out downwards.

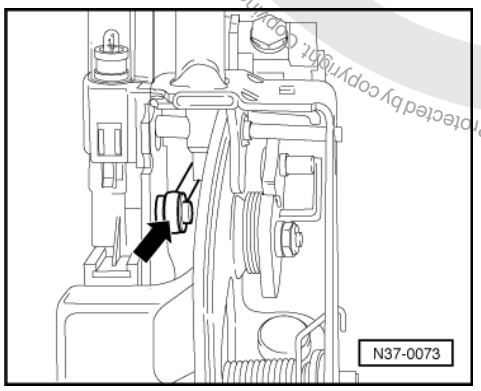

Protected by copyright. Copying for private or commercial purposes, in part or in whole, is not permitted unless authorised by Volkswagen AG. Volkswagen AG does not guarantee or accept any liability with respect to the correctness of information in this document. Copyright by Volkswagen AG.
satelettronica

- -> Pull selector lever cable eye -arrow- from selector lever.
- Raise vehicle.

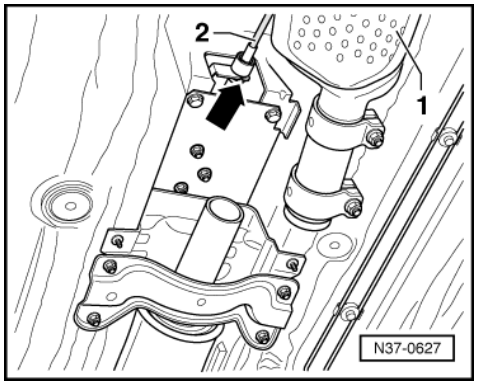

- -> Separate exhaust pipe at catalyst -1-.
- Remove front protective plate.
- Remove selector lever cable -2- from selector lever housing at support bracket -arrow-.
- Remove selector lever cable.

Installing

Install in reverse order but note following:

- Do not bend or kink selector lever cable. Lightly lubricate cable eye and ends of cable before installing.

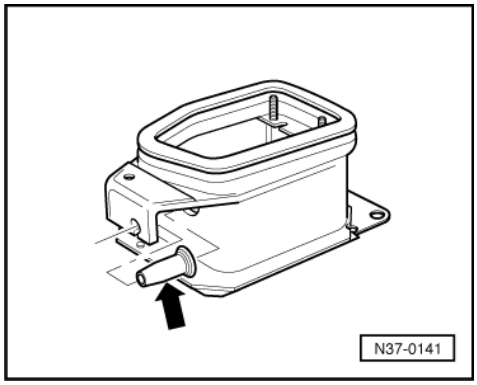

- -> Before installing selector lever cable, insert boot -arrow- in selector lever housing.
- Guide selector lever cable into selector lever housing, being careful not to damage boot.
- Install central console.

=> General body repairs, interior; Repair group 68; Compartments, covers and trims; Removing and installing centre console Compartments, covers and trims; Removing and installing centre console

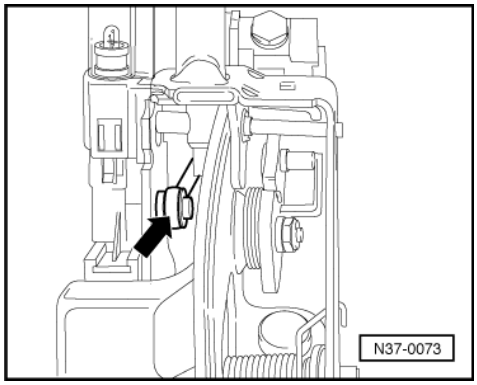

- -> Fit selector lever cable eye -arrow- on selector lever and secure with new circlip.

satelettronica
Protected by copyright. Copying for private or commercial purposes, in part or in whole, is not permitted unless authorised by Volkswagen AG. Volkswagen AG does not guarantee or accept any liability with respect to the correctness of information in this document. Copyright by Volkswagen AG.

- Adjusting selector lever cable => Page 36 .

Tightening torques

Selector lever cable securing bolt to selector shaft lever => 40 , 19 -combi-screw

Selector lever handle set screw to selector lever => 37 , 2 -set screw

Protected by copyright. Copying for private or commercial purposes, in part or in whole, is not permitted unless authorised by Volkswagen AG. Volkswagen AG does not guarantee or accept any liability with respect to the correctness of information in this document. Copyright by Volkswagen AG.

2.7 - Dismantling and assembling selector lever

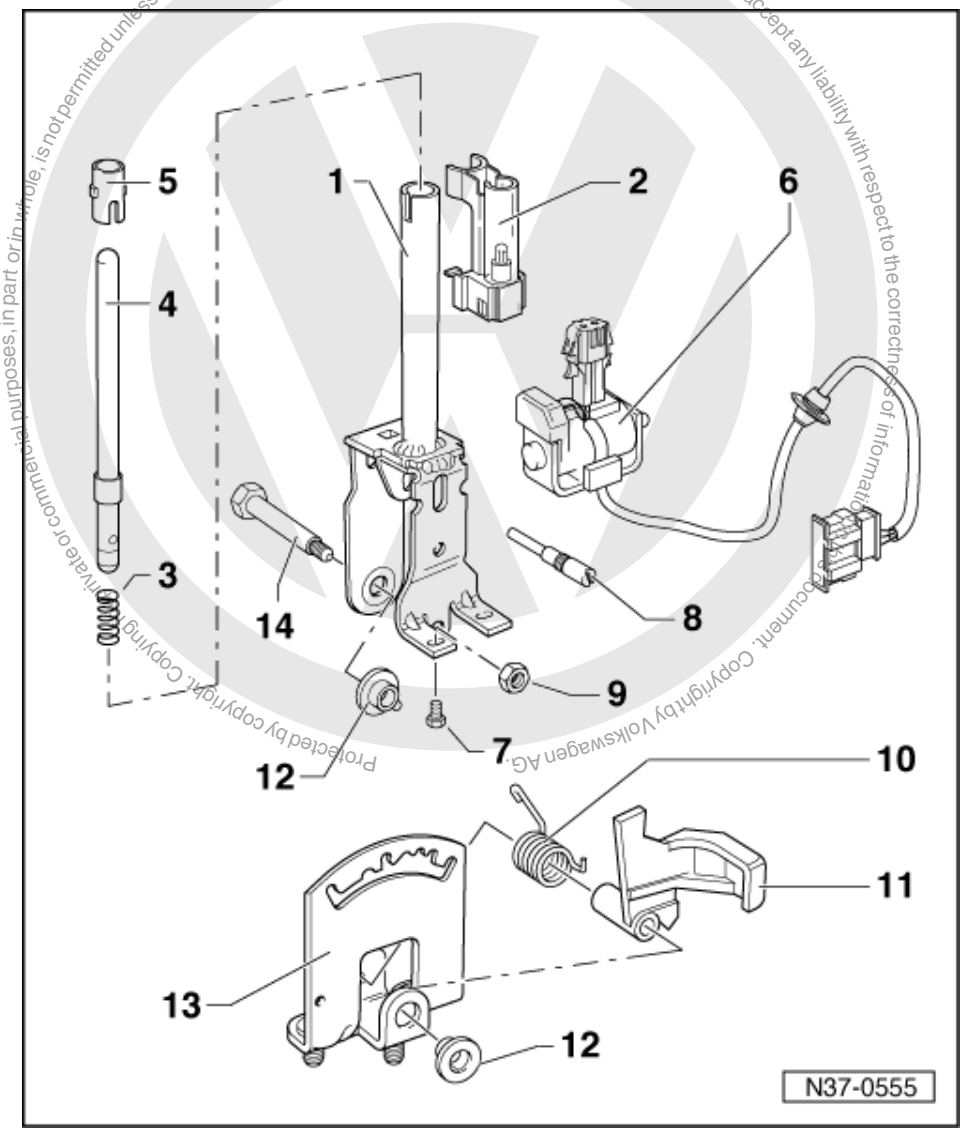

To renew individual parts, the selector lever must first be removed

=>page 38 .

1 **Selector lever**
- Assembling => Fig. 1

2 **Indicator lighting**
- Securing indicator lighting connector => Fig. 4

3 **Spring**

4 **Pressure rod**
- Grease in area of sliding surfaces

satelettronica

5 Guide sleeve
- Fit after installing pressure rod

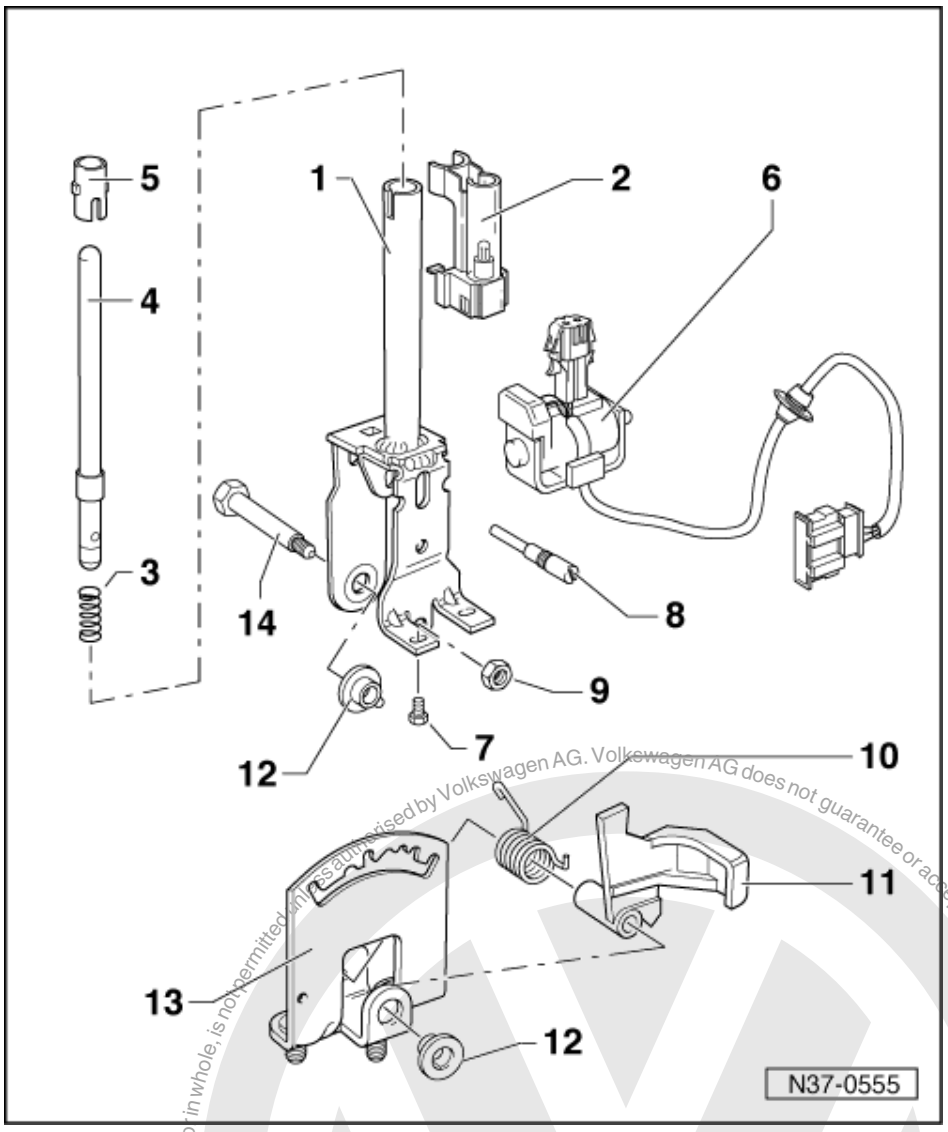

6 Selector lever lock solenoid -N110-
- Adjusting =>Fig. 2
- Functional check => Fig. 3
- Can be checked in electrical test and in measured value block

=> Automatic gearbox 01M self-diagnosis; Repair group 01; Performing self-diagnosis; Reading measured value block Performing self-diagnosis Reading measured value block

7 Screw, 3 Nm
- Qty. 2
- Install with locking fluid AMV 185 101 A1

8 Set screw
- Always renew
- To remove set screw, remove solenoid for selector lever lock and scale lighting. Clamp set screw in vice and loosen by turning selector lever.
- Install with locking fluid AMV 185 101 A1

Protected by copyright. Copying for private or commercial purposes, in whole, is not permitted unless authorised by Volkswagen AG. Volkswagen AG does not guarantee or accept any liability with respect to the correctness of information in this document. Copyright by Volkswagen AG.
satelettronica

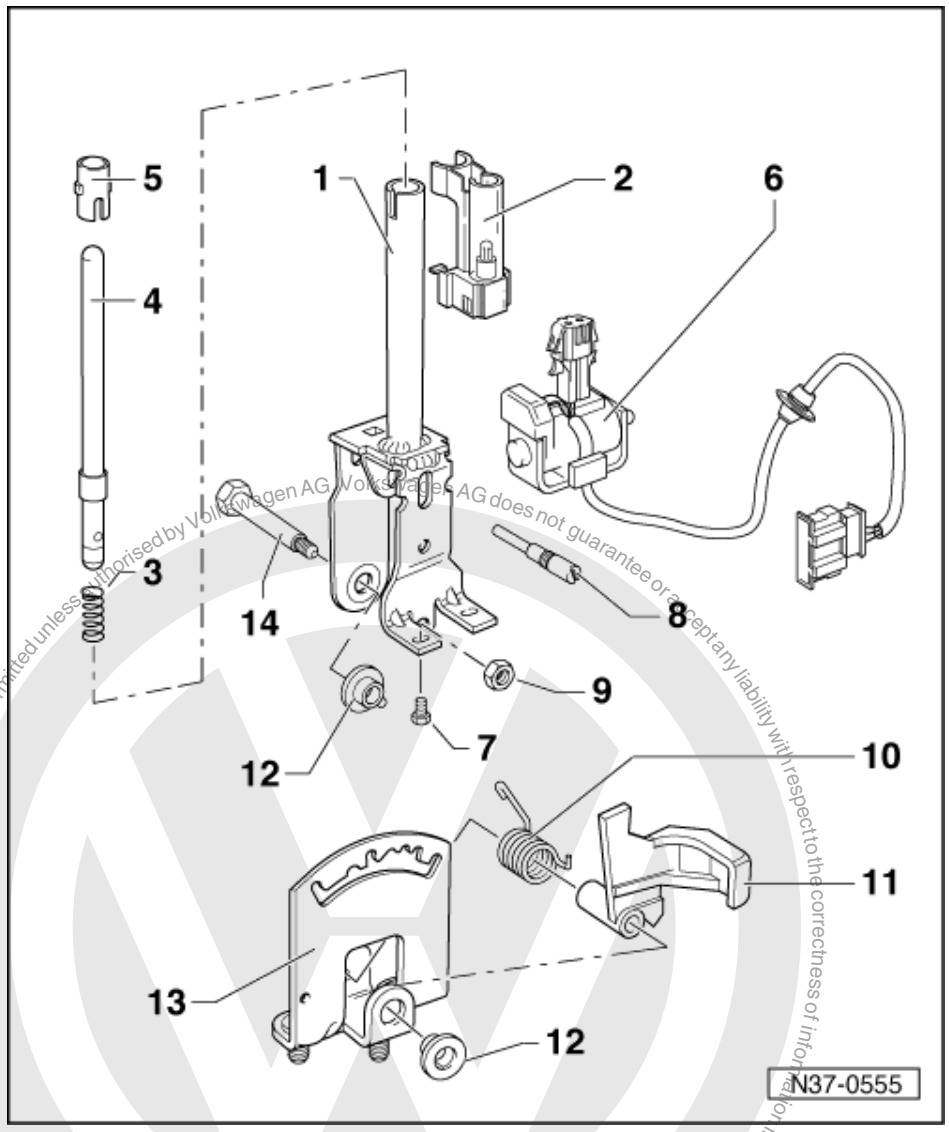

9 Nut, 10 Nm
- Self-locking
- Always renew

10 Spring
- Insert in selector lever together with lever -Item 11 -

11 Lever
- For locking in selector lever position "N" or "P"
- Adjusting =>Fig. 2

12 Bush

13 Detent plate
- Assemble selector lever before fitting in selector lever housing => Fig. 1

14 Combi-bolt
- Grease shank

Copyright by Volkswagen AG. Protected by copyright. Not for private or commercial purposes, in part or in whole, is not permitted unless authorised by Volkswagen AG. Volkswagen AG does not guarantee or accept any liability with respect to the correctness of information in this document.

satelettronica

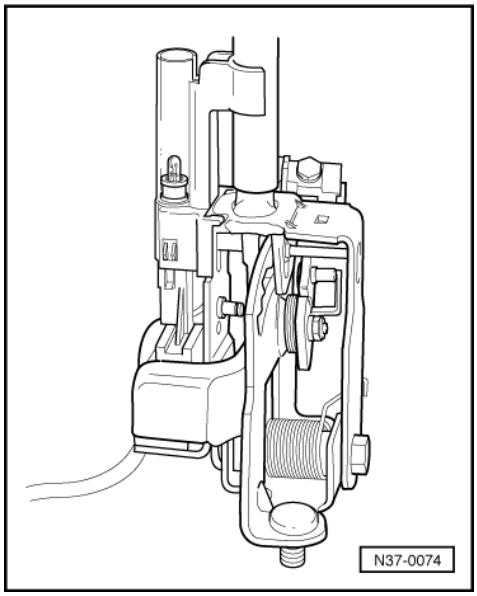

-> Fig.1 Assembling selector lever before installing

Adjust solenoid for selector lever lock -N110- and carry out functional check => Fig. 3 before installing selector lever in selector lever housing.

- Install set screw and selector lever lock solenoid -N110- screws with locking fluid AMV 185 101 A1.

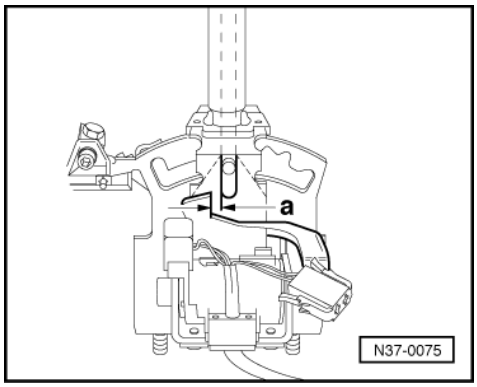

-> Fig.2 Adjusting selector lever lock solenoid -N110-

- Adjust solenoid by sliding in elongated holes so that a clearance -a- of 0,3 mm exists between pressure rod and lever => Fig. 3 .

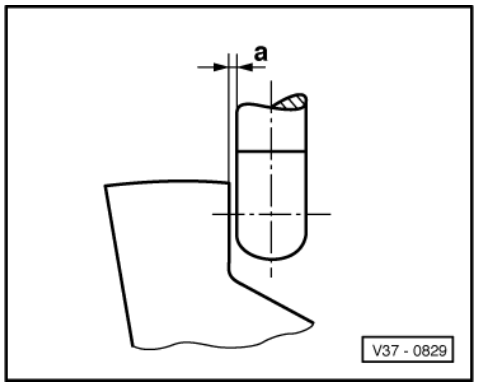

Protected by copyright. Copying for private or commercial purposes, in part or in whole, is not permitted unless authorised by Volkswagen AG. Volkswagen AG does not guarantee or accept any liability with respect to the correctness of information in this document. Copyright by Volkswagen AG.
satelettronica

-> Fig.3 Adjusting clearance between pressure rod and lever

Dimension a = 0.3 mm

Functional check

- Shift selector lever into "P" and supply solenoid with 12 V. It must not be possible to shift selector lever into a driving gear
  - Interrupt solenoid operation; it must be possible to shift into driving gears.

  Pressure rod must not catch on lever.

- Shift selector lever into "N" and check as in "P".

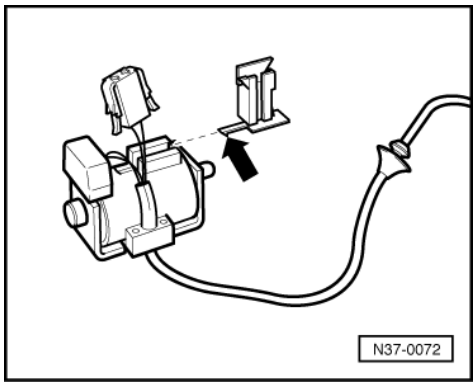

- After adjusting clearance, install assembled selector lever.

-> Fig.4 Securing indicator lighting connector

- Push bracket with lug (arrow) on until lug engages.
- Seat connector cable in bracket and slide connector into bracket.

3 - Checking gearbox

3.1 - Checking gearbox

Before checking the automatic gearbox, determine the cause of the fault as precisely as possible using the operating mode "guided fault finding" or "self-diagnosis" and rectify it.

=> Repair group 01; Performing self-diagnosis Performing self-diagnosis

Locations of diagnosis connections => from page 30 .

Protected by copyright. Copying for private or commercial purposes, in part or in whole, is not permitted unless authorised by Volkswagen AG. Volkswagen AG does not guarantee or accept any liability with respect to the correctness of information in this document. Copyright by Volkswagen AG.

satelettronica

3.2 - Checking main pressure

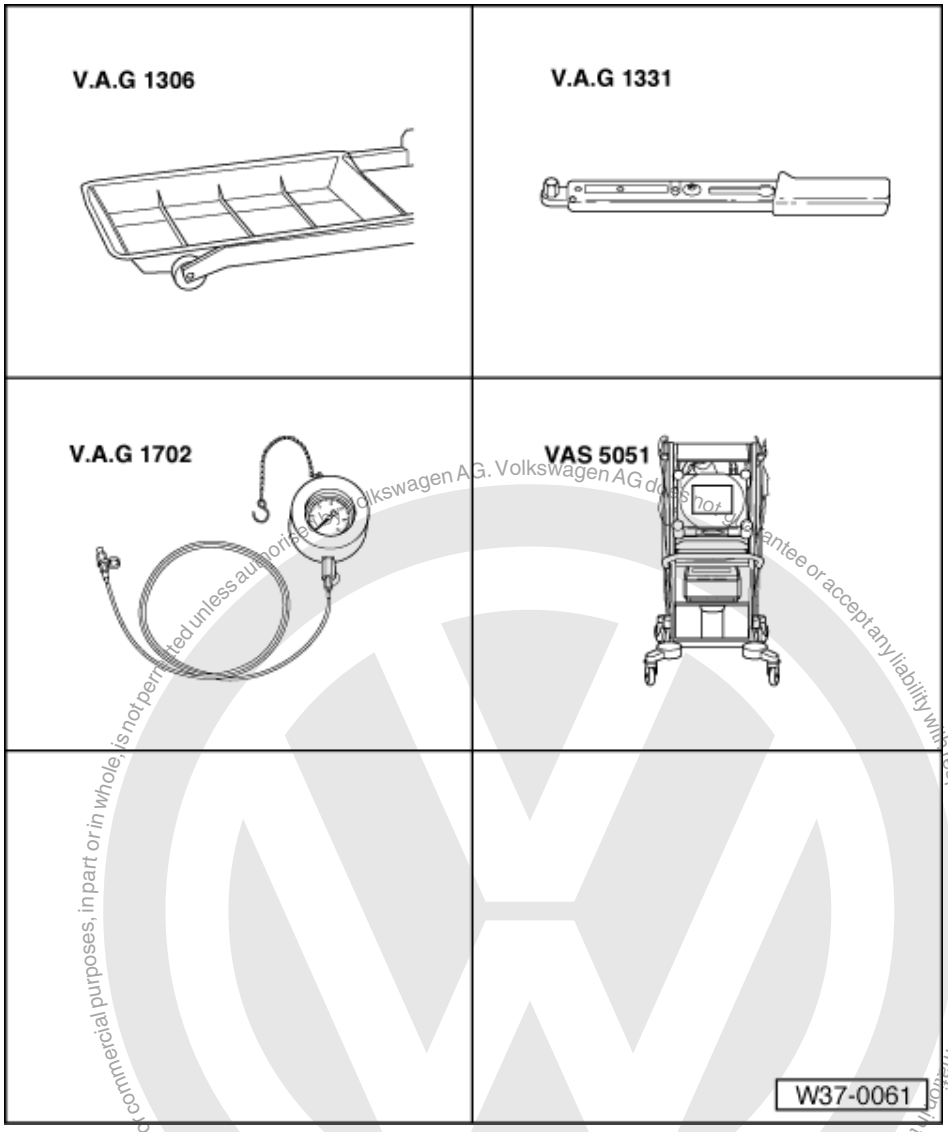

Special tools, workshop equipment, test and measuring appliances and auxiliary items required

- V.A.G 1306 Drip tray
- V.A.G 1331 Torque wrench
- V.A.G 1702 Pressure tester
- VAS 5051 Vehicle diagnosis, testing and information system
- VAS 5051/3 Diagnosis lead

Additional information required

- Workshop manual Caddy 1996 ▸, Polo Classic 1996 ▸, Polo estate 1998 ▸, Automatic gearbox 01M, self-diagnosis

Main pressure should be tested on a rolling road whenever possible.

Locations of diagnosis connections => from page 30 .

- With ignition switched off, connect tester VAS 5051 to diagnosis connection using diagnosis cable VAS 5051/1 or VAS 5051/3.

Protected by copyright. Copyright by Volkswagen AG. Volkswagen AG does not guarantee or accept any liability with respect to the correctness of information in this document. Copying for private or commercial purposes, in part or in whole, is not permitted unless authorised by Volkswagen AG.
satelettronica

=> Repair group 01; Performing self-diagnosis Performing self-diagnosis

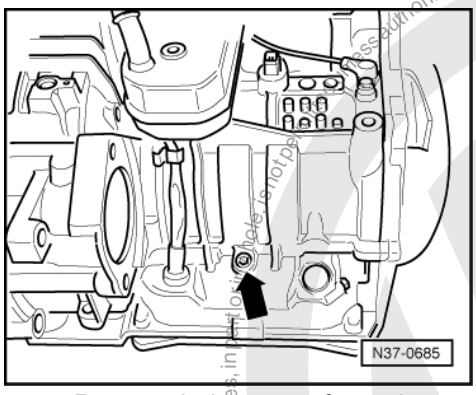

- -> Remove bolt -arrow- for main pressure drilling. Always renew bolt.
- Connect pressure tester V.A.G 1702 and tighten thumb screw.
- Start engine.
- Bleed pressure tester V.A.G 1702. To do this, loosen thumb screw and tighten when bleeding is complete.
- Allow ATF temperature to rise to 60 °C.

Main pressure specifications at idle

	Selector lever positions	
	D Idle	R Idle
Pressure in bar	3.4 ... 3.8	5 ... 6

If there are deviations from the prescribed values, the following could be the cause:

Possible causes	Remedy
Idling speed too high	Adjust engine
ATF pump defective	Check ATF pump and renew if necessary
Sticking valves in valve chest	Renew valve chest

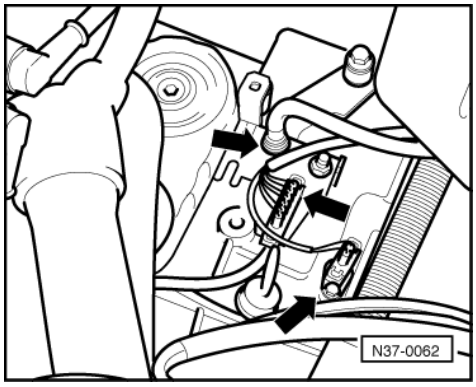

- Switch off engine.

-> Solenoid valve connector

- Press fuse together and pull off connector.
- Start engine.

satelettronica

Main pressure specifications at 2000 rpm

	Selector lever positions and test conditions	
	D Engine speed ca. 2000 rpm	R Engine speed ca. 2000 rpm
Pressure in bar	12.4 ... 13.2	23.0 ... 24.0

If there are deviations from the prescribed values, the following could be the cause:

Possible causes	Remedy
ATF pump defective	Check ATF pump and renew if necessary
Sticking valves in valve chest	Renew valve chest

After test:

- Disconnect pressure tester V.A.G 1702.
- Install new bolt for main pressure drilling and tighten to 15 Nm.
- Fit solenoid valve connector.
- Once connector has been fitted, interrogate and erase fault memory.

3.3 - Fault finding table for "4-speed automatic gearbox"

=> "Fault finding" binder; Power transmission, No. 14

Protected by copyright. Copying for private or commercial purposes, in part or in whole, is not permitted unless authorised by Volkswagen AG. Volkswagen AG does not guarantee or accept any liability with respect to the correctness of information in this document. Copyright by Volkswagen AG.
satelettronica

4 - Removing and installing gearbox

4.1 - Removing and installing gearbox

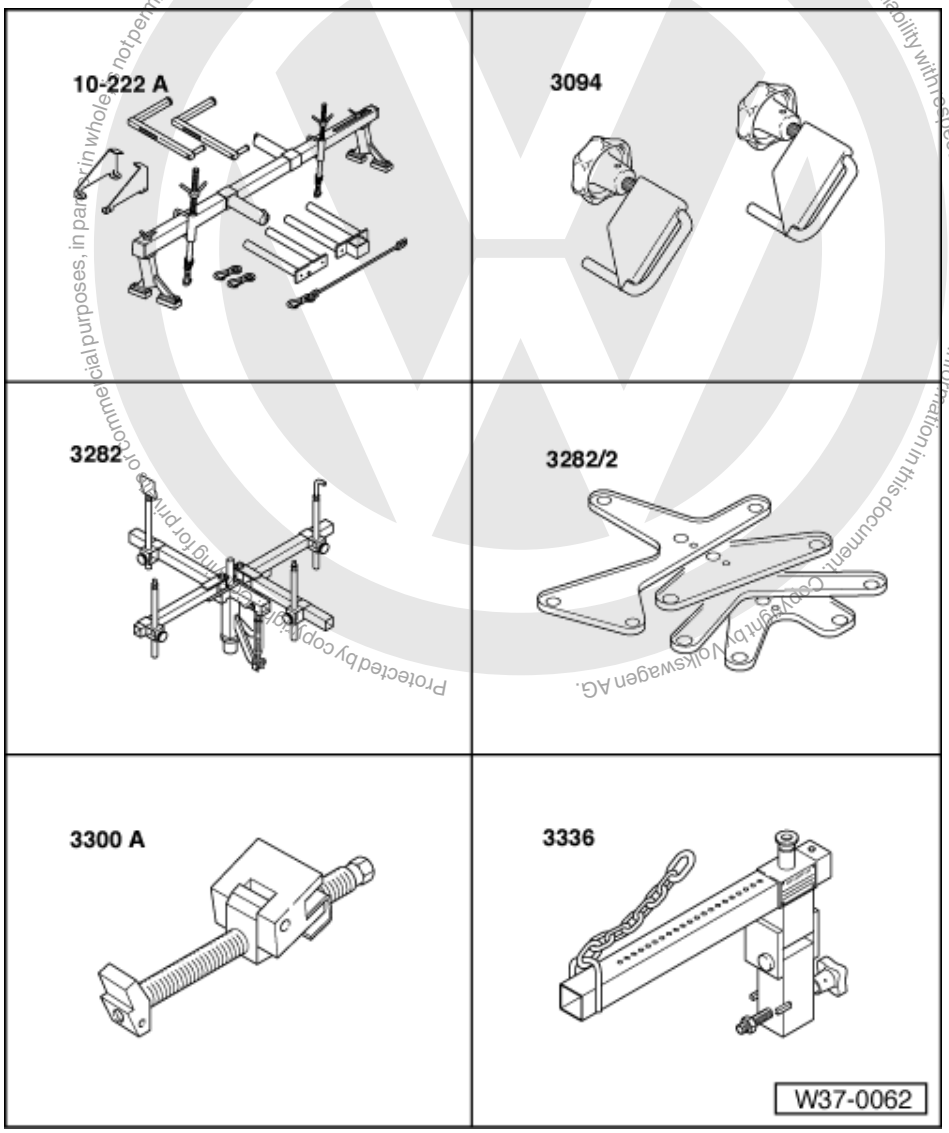

Special tools, workshop equipment, test and measuring appliances and auxiliary items required

- 10-222 A Support
- 10-222 A/1 Support
- 3094 Hose clamps
- 3282 Gearbox support
- 3282/2 Adjustment plate
- 3300 A Engine support
- 3336 Gearbox lifting beam

Protected by copyright. Copying for private or commercial purposes, in part or in whole, is not permitted unless authorised by Volkswagen AG. Volkswagen AG does not guarantee or accept any liability with respect to the correctness of information in this document. Copyright by Volkswagen AG.
satelettronica

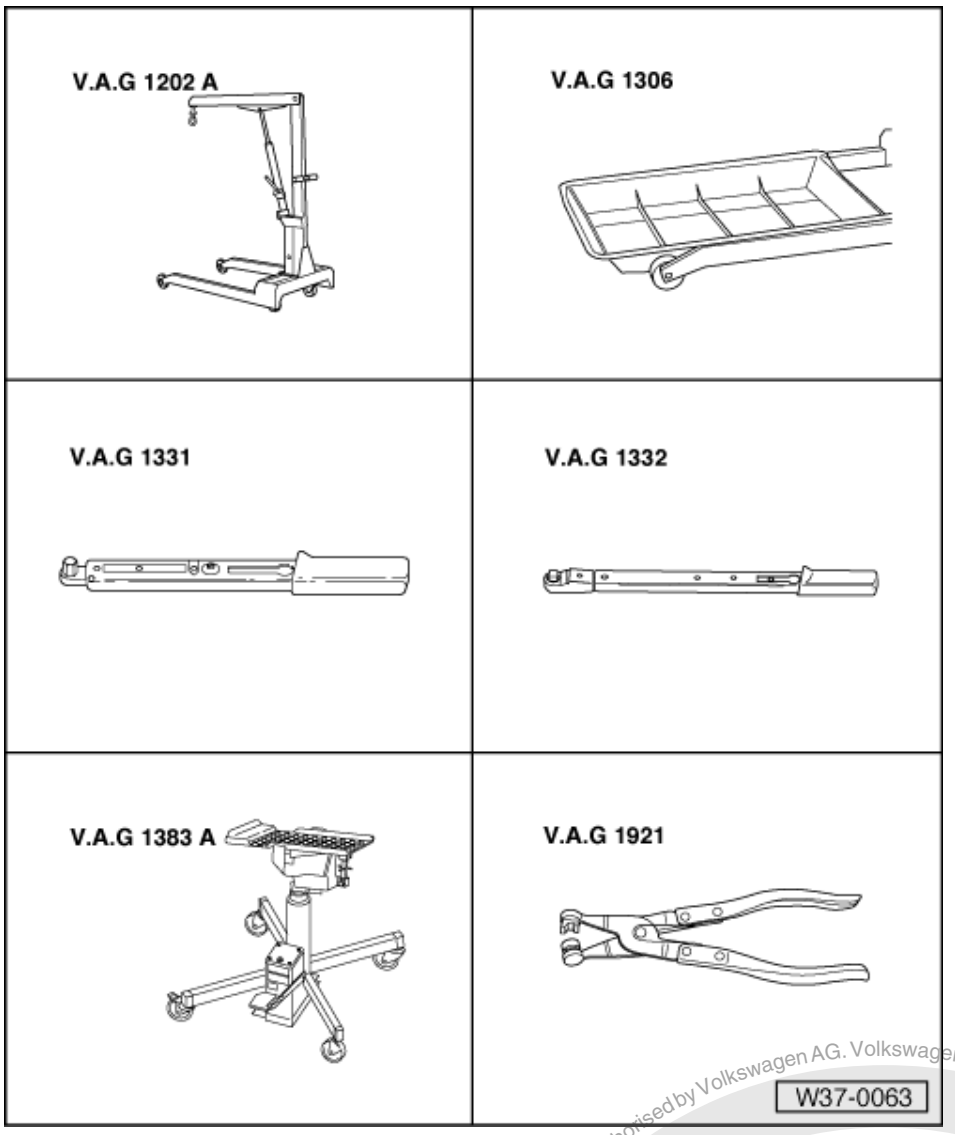

Special tools, workshop equipment, test and measuring appliances and auxiliary items required

- V.A.G 1202 A Workshop crane
- V.A.G 1306 Drip tray
- V.A.G 1331 Torque wrench
- V.A.G 1332 Torque wrench
- V.A.G 1383 A Engine/gearbox jack
- V.A.G 1921 Pliers for spring-type clips

Protected by copyright. Copying for private or commercial purposes, in part or in whole, is not permitted unless authorised by Volkswagen AG. Volkswagen AG does not guarantee or accept any liability with respect to the correctness of information in this document. Copyright by Volkswagen AG.
satelettronica

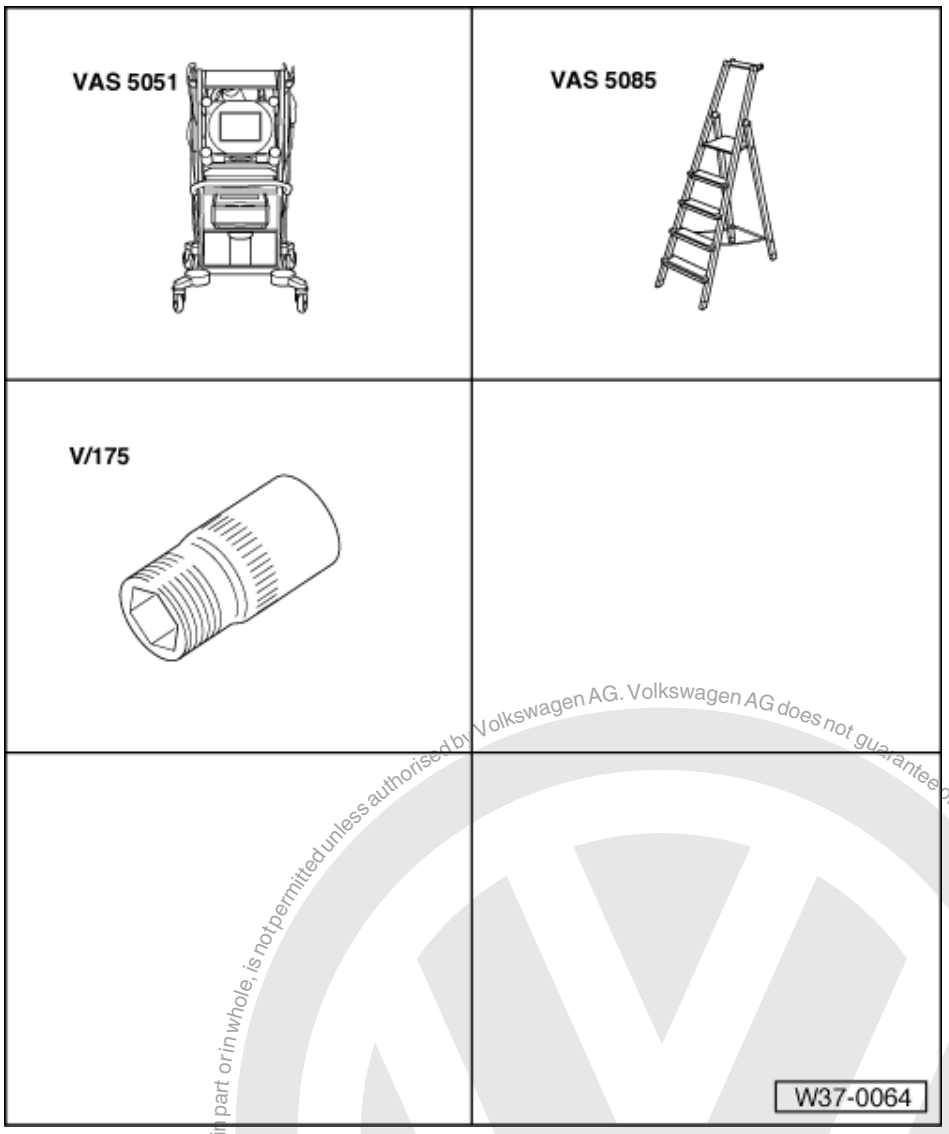

Special tools, workshop equipment, test and measuring appliances and auxiliary items required

- VAS 5051 Vehicle diagnosis, testing and information system
- VAS 5085 Step-ladder
- V/175 Socket

Additional information

- Workshop manual Caddy 1996 ‣, Polo Classic 1996 ‣, Polo estate 1998 ‣ Running gear, axles, steering
- Workshop manual Caddy 1996 ‣, Polo Classic 1996 ‣, Polo estate 1998 ‣ Electrical system
- Workshop manual Caddy 1996 ‣, Polo Classic 1996 ‣, Polo estate 1998 ‣ Engine, mechanics

Removing

- First check whether a coded radio is fitted. If this is the case obtain the anti-theft coding.
- Shift selector lever into "P" position.
- With the ignition switched off disconnect the battery earth strap.
- Disconnect speedometer sender -G22- connector at gearbox.
- Disconnect speedometer sender -G68- connector.

Copyright by Volkswagen AG. Volkswagen AG does not guarantee or accept any liability with respect to the correctness of information in this document. Copyright by Volkswagen AG. Protected by copyright. Copying for private or commercial purposes, in part or in whole, is not permitted unless authorised by Volkswagen AG.
satelettronica

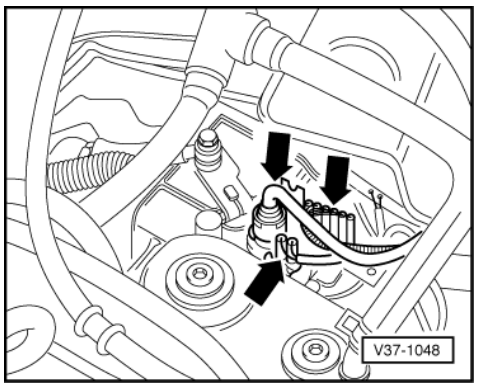

- -> Remove electrical connections (arrows) at gearbox.
- Remove wiring harness from retainer on starter and place to the side.
- Remove wiring harness retainer on starter.
- Unbolt earth cable -1- from upper engine/gearbox securing bolt.

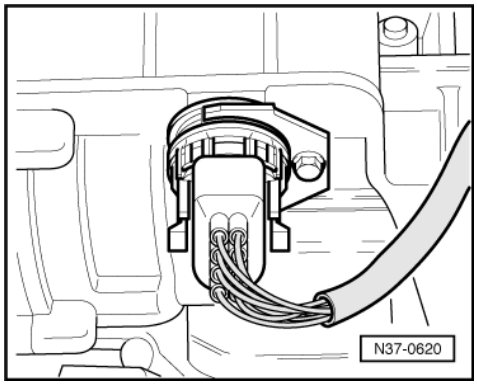

- -> Pull connector off multi-function switch.
- Move selector lever to "P" and unscrew selector lever cable from lever/selector shaft.
- Remove selector lever cable anchorage circlip and remove selector lever cable.
- Do not kink selector lever cable.

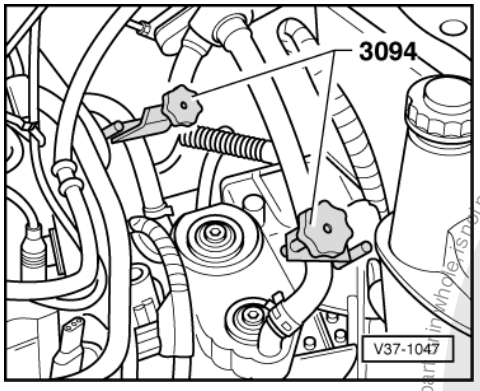

- -> Clamp-off ATF cooler hoses with -3094- and detach at ATF cooler.
- Seal off ATF cooler with clean plugs.
- Remove engine/gearbox upper securing bolts.
- Remove coolant system expansion reservoir and lay to one side.

- Fit support bar 10-222A together with legs 10-222 A/1.

satelettronica
Protected by copyright. Copying for private or commercial purposes, in part or in whole, is not permitted unless authorised by Volkswagen AG. Volkswagen AG does not guarantee or accept any liability with respect to the correctness of information in this document. Copyright by Volkswagen AG.

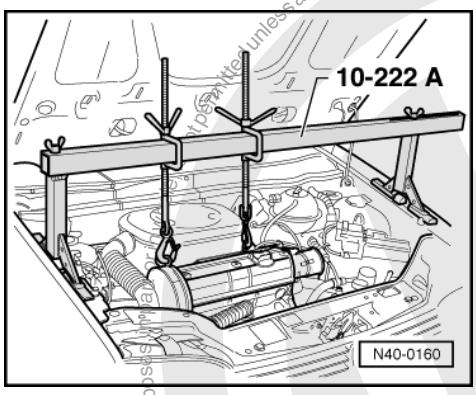

- -> Fit support bar 10-222 A with legs 10-222 A/1 and support engine/gearbox in this position.

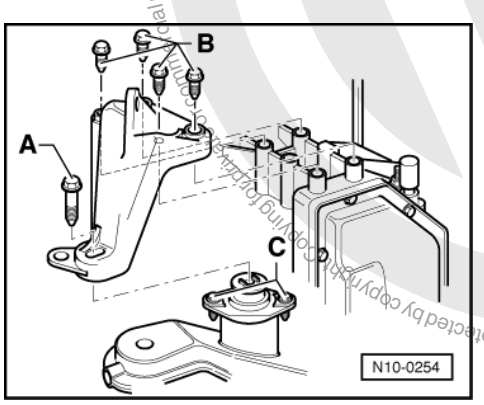

- -> Remove left engine mounting console complete.
- Remove bolts -A- and -B-.

Disregard bolts -C-.

- Unbolt coolant line bracket from console.

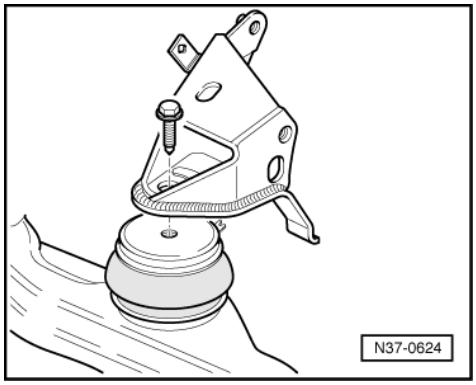

- -> Unbolt front console from engine carrier and gearbox.
- Remove front left wheel bolts.
- Raise vehicle.
- Remove left wheel.
- Remove noise insulation -arrows-.

Protected by copyright. Copying for private or commercial purposes, in part or in whole, is not permitted unless authorised by Volkswagen AG. Volkswagen AG does not guarantee or accept any liability with respect to the correctness of information in this document. Copyright by Volkswagen AG.
satelettronica

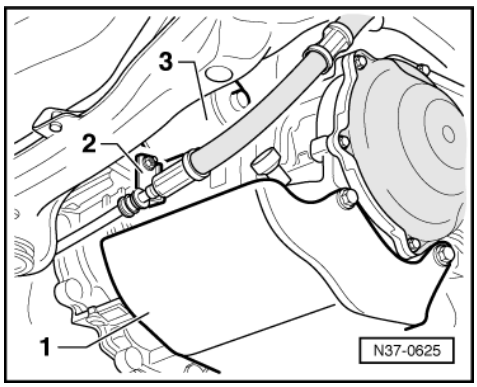

- -> Remove ATF oil pan protective plate -1-.
- Remove bracket -2- for power assisted steering pressure line.
- Remove starter -3-.

=> Electrical system; Repair group 27; Starter; Removing and installing starter Starter Removing and installing starter

- Unbolt power assisted steering pressure line from engine carrier.
- Remove pulley cover.

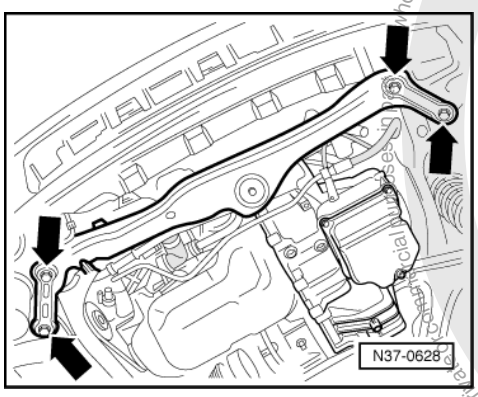

- -> Remove front engine mounting -arrows-.

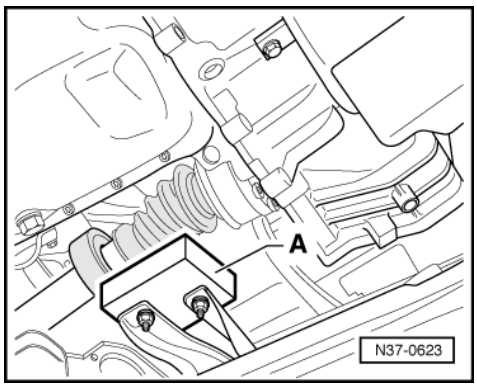

- -> Remove vibration damper -A- from sub-frame. Mark installation position.
- Unbolt drive shafts at flanges and tie up.

- Turn steering to right lock.
- Mark installation position of ball joint bolts on left-hand wishbone and remove bolts.

Protected by copyright. Copying for private or commercial purposes, in whole or in part, is not permitted unless authorised by Volkswagen AG. Volkswagen AG does not guarantee or accept any liability with respect to the correctness of information in this document. Copyright by Volkswagen AG.
satelettronica

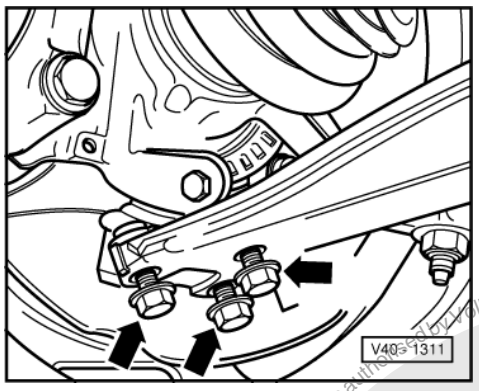

- -> Remove bolts -arrows-.
- Remove torque converter cover plate from gearbox.

- Unclip cap for torque converter nuts cover.

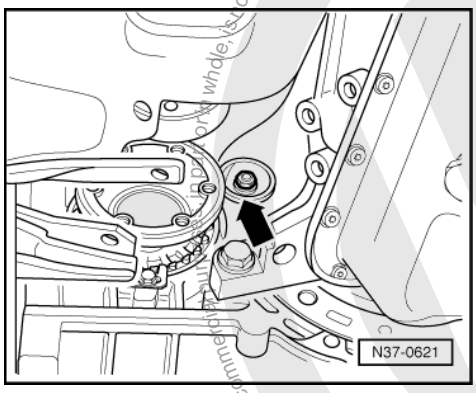

- -> Remove nuts (arrow) from torque converter (Qty. 3) using socket V 175.

  Turn crankshaft 120° further in each case.

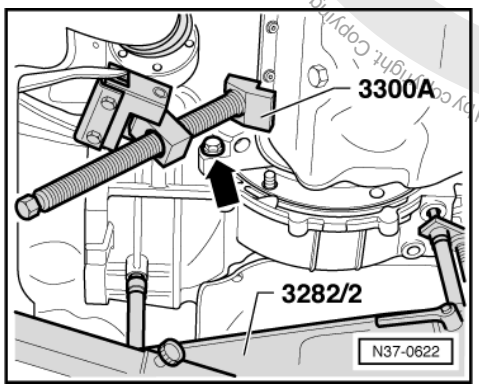

- -> Remove lower engine/gearbox connecting bolt -arrow-.
- Tilt engine and gearbox forwards using supporting device 3300 A.

Protected by copyright. Copyright by Volkswagen AG.
Copying for private or commercial purposes, in whole or in part, is not permitted unless authorised by Volkswagen AG. Volkswagen AG does not guarantee or accept any liability with respect to the correctness of information in this document.
satelettronica

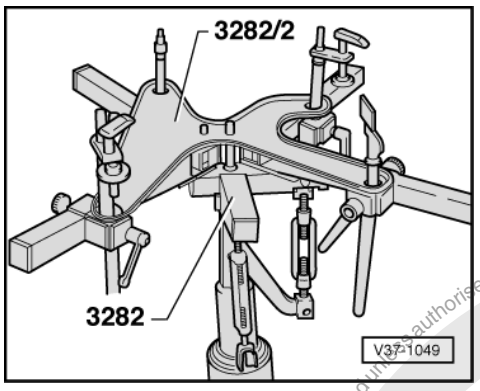

- -> Set up gearbox support 3282.

The gearbox support 3282 is set up with the adjusting plate 3282/2 for removing the automatic gearbox 01M.

The symbols on the adjusting plate indicate the mounts required, the arrow points forward.

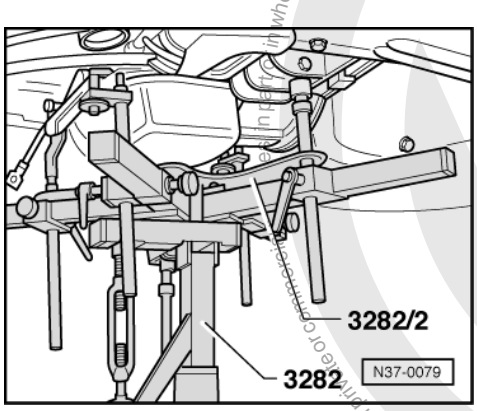

- -> Move jack V.A.G 1383 A with gearbox support 3282 under the gearbox, align adjusting plate parallel to gearbox and support gearbox.

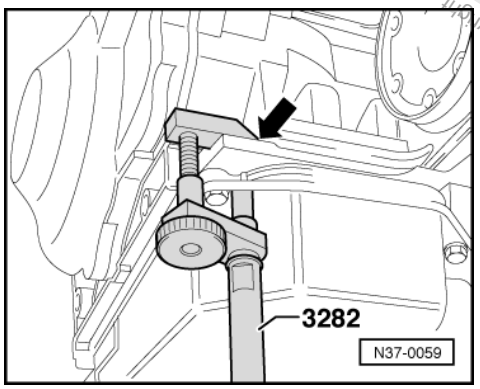

- -> Place safety support pin on sump and secure to gearbox housing (arrow).
- Press gearbox off engine, when doing this, press torque converter out of drive plate.
- Press torque converter against ATF pump.
- Climb up ladder VAS 5058 in order to lower engine-gearbox assembly via spindles.
- Lower engine using support device spindle.
- Lower gearbox slightly.
- When doing this guide the power assisted steering pressure pipe past the gearbox.
- Secure torque converter to prevent it falling out.
- Tilt gearbox using gearbox jack spindle and whilst lowering ensure cover (wheel housing side) is guided closely past wheel housing.

Ensure that the right joint flange does not contact the supporting device 3300 A and that the multi-function switch does not contact the subframe.

Protected by copyright. Copyright by Volkswagen AG.
Copyright by Volkswagen AG. Volkswagen AG does not guarantee or accept any liability with respect to the correctness of information in this document.
satelettronica

- Swivel gearbox and carefully lower.

Use gearbox lifting tackle 3336 to transport automatic gearbox.

When working on the gearbox, secure it to the repair stand with gearbox lifting tackle 3336, retaining plate VW 309 and gearbox support VW 353 => 70 .

Installing

- Before installing, ensure that the dowel sleeves are correctly located.
- Before installing gearbox ensure that torque converter seats correctly in gearbox => Page 16 .
- Observe contact pattern of torque converter on drive plate.

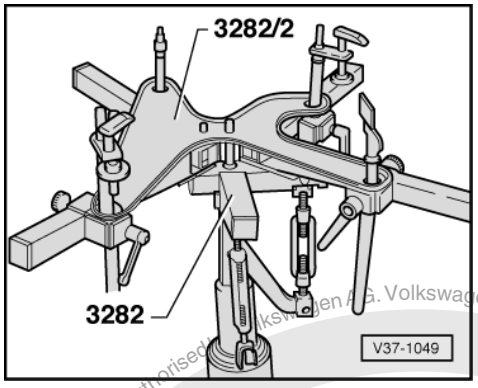

- -> Set up gearbox support 3282.

Gearbox support 3282 is set up with the adjusting plate 3282/2 for installing automatic gearbox 01M.

The symbols on the adjusting plate indicate the mounts required, the arrow points forward.

- Place gearbox on gearbox jack with gearbox lifting tackle 3336 => 68 .

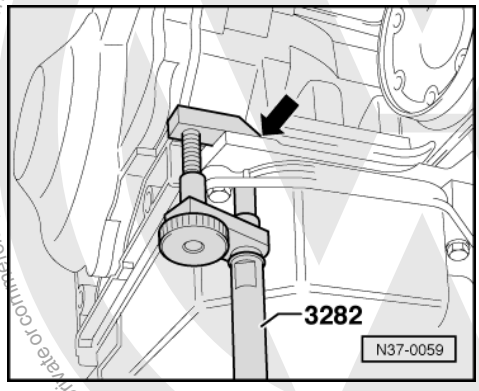

- -> Place safety support pin on sump and secure to gearbox housing (arrow).
- Place gearbox jack under vehicle.
- Align gearbox to engine.
- Guide gearbox in between lowered engine and underbody.
- When doing this guide the power assisted steering pressure pipe past the gearbox.
- Tilt gearbox using gearbox jack spindle and ensure cover (wheel housing side) is guided closely past wheel housing whilst raising.

Ensure that the right joint flange does not contact the supporting device 3300 A and that the multi-function switch does not contact the subframe.

- Climb up ladder VAS 5058 in order to raise engine-gearbox assembly via spindles.

satelettronica

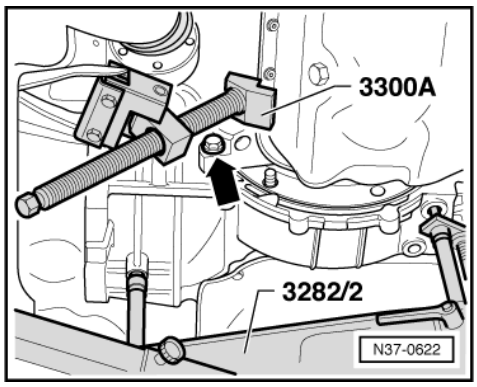

- -> Install lower engine/gearbox connecting bolt -arrow-.

  Tightening torque => 68

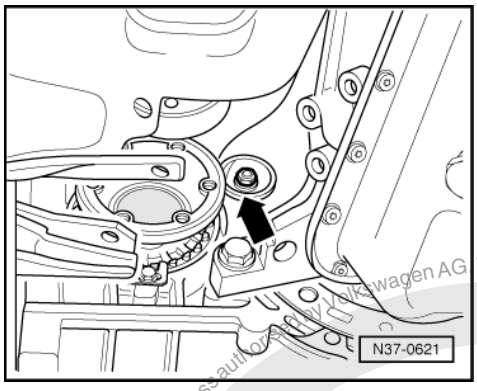

- -> Bolt torque converter and drive plate together.
- Tighten nuts (arrow) on torque converter (Qty. 3) using socket V 175.

  Turn crankshaft 120° further in each case.
  Tightening torque => 68

- Clip on cap for torque converter nuts cover.

- Bolt torque converter cover onto gearbox.

  Tightening torque => 68

- Remove gearbox jack and support device 3300 A.
- Install upper engine/gearbox securing bolts.

  Tightening torque => 68

- Install left engine mounting console on gearbox and hand-tighten bolts.

Protected by copyright. Copying for private or commercial purposes, in part or in whole, is not permitted unless authorised by Volkswagen AG. Volkswagen AG does not guarantee or accept any liability with respect to the correctness of information in this document. Copyright by Volkswagen AG.
satelettronica

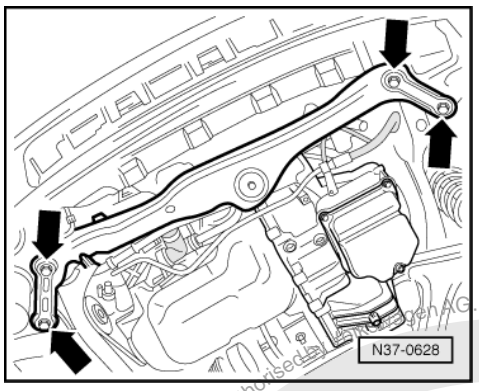

- -> Install front engine mountings -arrows-.

=> Repair group 10; Removing and installing engine; Torque settings Removing and installing engine Torque settings

- Bolt power assisted steering lines to front of subframe.

=> Running gear, axles, steering; Repair group 48; Vane pump, reservoir, hydraulic lines; Assembly overview: Vane pump with hydraulic lines Vane pump, reservoir, hydraulic lines Assembly overview: Vane pump with hydraulic lines

- Install pulley cover.
- Install lower engine/gearbox connecting bolts.

  Tightening torque => 68

- Install starter.

=> Electrical system; Repair group 27; Starter motor; Removing and installing starter motor Starter motor Removing and installing starter motor

- Secure front console on subframe.
- Ensure that lug on front console engages in the notch in bonded rubber mounting.
- Align engine mountings stress-free by rocking.

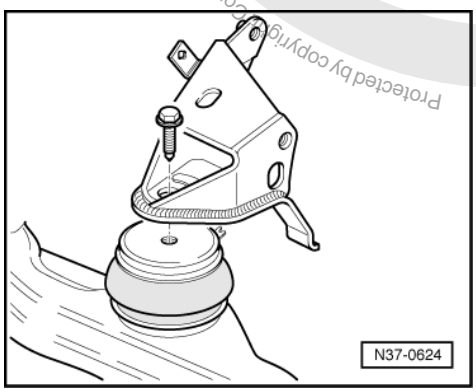

- -> Tighten bolts on console to torque.

=> Repair group 10; Removing and installing engine; Assembly mountings Removing and installing engine Assembly mountings

- Install coolant pipe bracket on front console.

=> Repair group 19; Removing and installing parts of cooling system Removing and installing parts of cooling system

Protected by copyright. Copyright by Volkswagen AG. Volkswagen AG does not guarantee or accept any liability with respect to the correctness of information in this document. Copyright by Volkswagen AG.
satelettronica

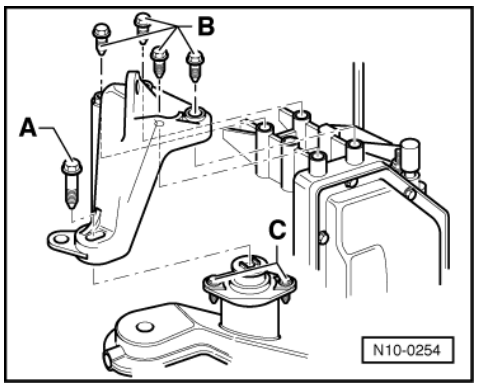

- -> Tighten console bolts -A- and -B- on left of subframe to torque.

=> Repair group 10; Removing and installing engine; Assembly mountings Removing and installing engine Assembly mountings

Disregard bolts -C-.

- Remove support device 10-222 A.
- Install coolant expansion tank.
- Install wiring harness bracket on starter.

=> Electrical system; Repair group 27; Starter motor; Removing and installing starter motor Starter motor Removing and installing starter motor

- Check all electrical connections; cover/seal must prevent ingress of moisture (visual check).

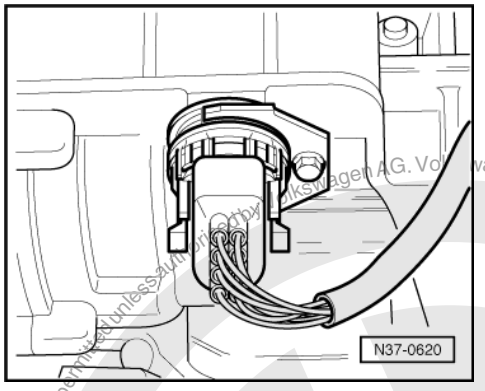

- Clip wiring harness into bracket.
- -> Fit multi-function switch connector.
- Reconnect speedometer sender -G68- connector.
- Reconnect speedometer sender -G22- connector.

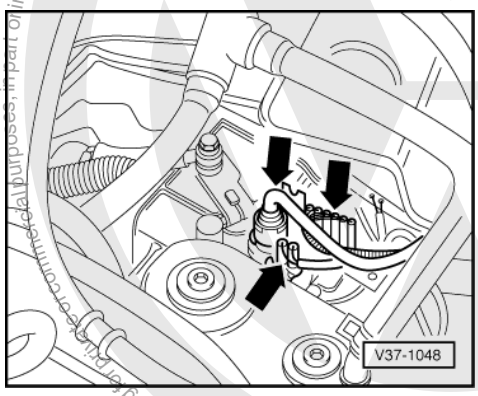

- -> Reconnect electrical connections (arrows) on gearbox.
- Attach ATF cooler hoses to ATF cooler and secure.
- Remove hose clamp 3094.

satelettronica
Protected by copyright. Copyright by Volkswagen AG. Volkswagen AG does not guarantee or accept any liability with respect to the correctness of information in this document. Copyright by Volkswagen AG.

- Fit driveshafts to flanged shafts.

=> Running gear, axles, steering; Repair group 40; Servicing driveshafts; Removing and installing driveshafts Servicing driveshafts Removing and installing driveshafts

- Install wishbone with ball joint using new securing plate and bolts.

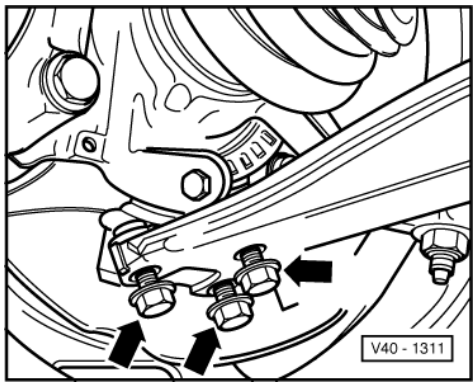

- -> Secure new bolts -arrows- at markings for old bolts.

=> Running gear, axles, steering; Repair group 40; Removing and installing wishbone Removing and installing wishbone

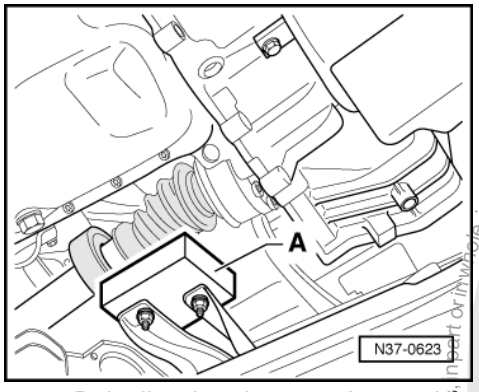

- -> Bolt vibration damper -A- to subframe.

=> Running gear, axles, steering; Repair group 40; Servicing front suspension; Overview, subframe, anti-roll bar, wishbones Servicing front suspension Overview, subframe, anti-roll bar, wishbones

Fitting position: Install the side with the greater length from edge to holes facing direction of travel.

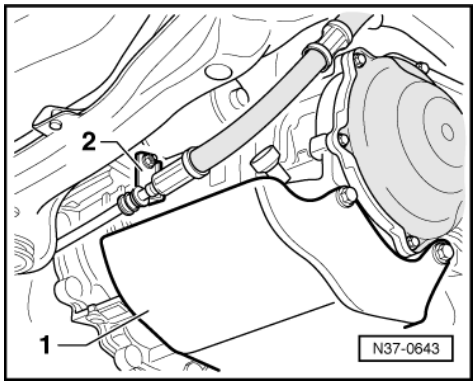

- -> Install ATF oil pan protective plate -1-.

Tightening torque => 68

satelettronica
Protected by copyright. Copying for private or commercial purposes, in part or in whole, is not permitted unless authorised by Volkswagen AG. Volkswagen AG does not guarantee or accept any liability with respect to the correctness of information in this document. Copyright by Volkswagen AG.

- Install bracket -2- for power assisted steering pressure pipe-.

=> Running gear, axles, steering; Repair group 48; Vane pump, reservoir, hydraulic lines; Assembly overview: Vane pump with hydraulic lines Vane pump, reservoir, hydraulic lines Assembly overview: Vane pump with hydraulic lines

- Install noise insulation.

- Fit front left wheel.

=> Running gear, axles, steering; Repair group 40; Servicing front suspension; II - Servicing wheel bearings Servicing front suspension II - Servicing wheel bearings

- Bolt earth cable -1- to engine/gearbox connecting bolt.
- Reconnect earth strap to battery.
- Move selector lever to "P" and bolt selector lever cable to selector shaft lever => 40 , 19 -combi-bolt.
- Fit new circlip to selector lever cable at support bracket on gearbox.
- Perform self-diagnosis and basic setting using "guided fault finding" on VAS 5051.

=> Repair group 01; Performing self-diagnosis Performing self-diagnosis

- Enter radio code.

=> Radio, Telephone, Navigation; Repair group 91; Radio systems Radio systems

- Initialise electric windows, set clock.

=> Maintenance manual

- Check selector lever cable adjustment, adjust if necessary => Page 36 .
- With gearbox installed, check final drive oil level => page 214 .
- Check and top up ATF level =>Page 72 .

Tightening torques

Torque converter to drive plate	60 Nm
Gearbox to engine bolt M 10	60 Nm
Gearbox to engine bolt M 12	80 Nm
Cover plate to gearbox	15 Nm
Protective plate to ATF oil pan	45 Nm

4.2 - Transporting automatic gearbox

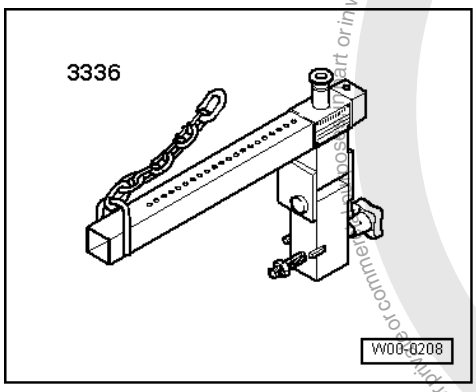

Special tools, workshop equipment, testers, measuring instruments and auxiliary items required

- 3336 Gearbox lifting tackle

Protected by copyright. Copying for private or commercial purposes, in part or in whole, is not permitted unless authorised by Volkswagen AG. Volkswagen AG does not guarantee or accept any liability with respect to the correctness of information in this document. Copyright by Volkswagen AG.
satelettronica

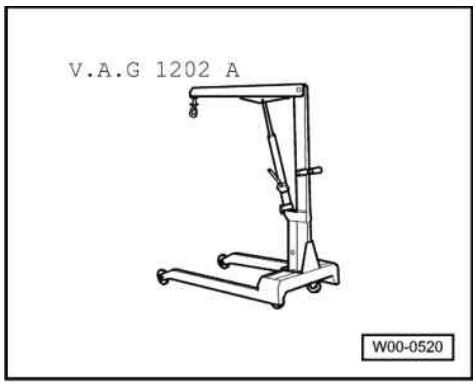

- V.A.G 1202 A Workshop crane

Gearbox lifting tackle 3336 may be used for transporting the automatic gearbox as well as for setting up gearbox support 3282.

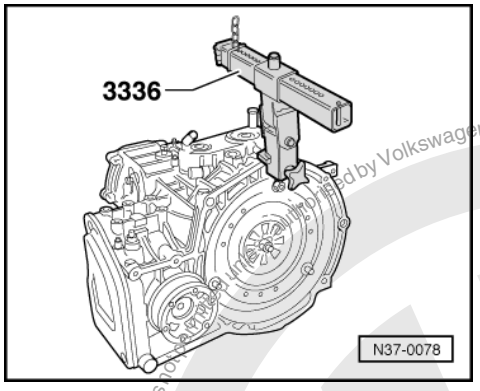

- -> Secure gearbox lifting tackle 3336 to gearbox housing flange.
- Position pins so that 8 holes are visible in chain direction.
- Support gearbox using workshop crane V.A.G 1202 A and gearbox lifting device 3336.

Protected by copyright. Copyright for private or commercial purposes, in part or in whole is not permitted unless authorised by Volkswagen AG. Volkswagen AG does not guarantee or accept any liability with respect to the correctness of information in this document. Copyright by Volkswagen AG.
satelettronica

4.3 - Securing gearbox to assembly stand

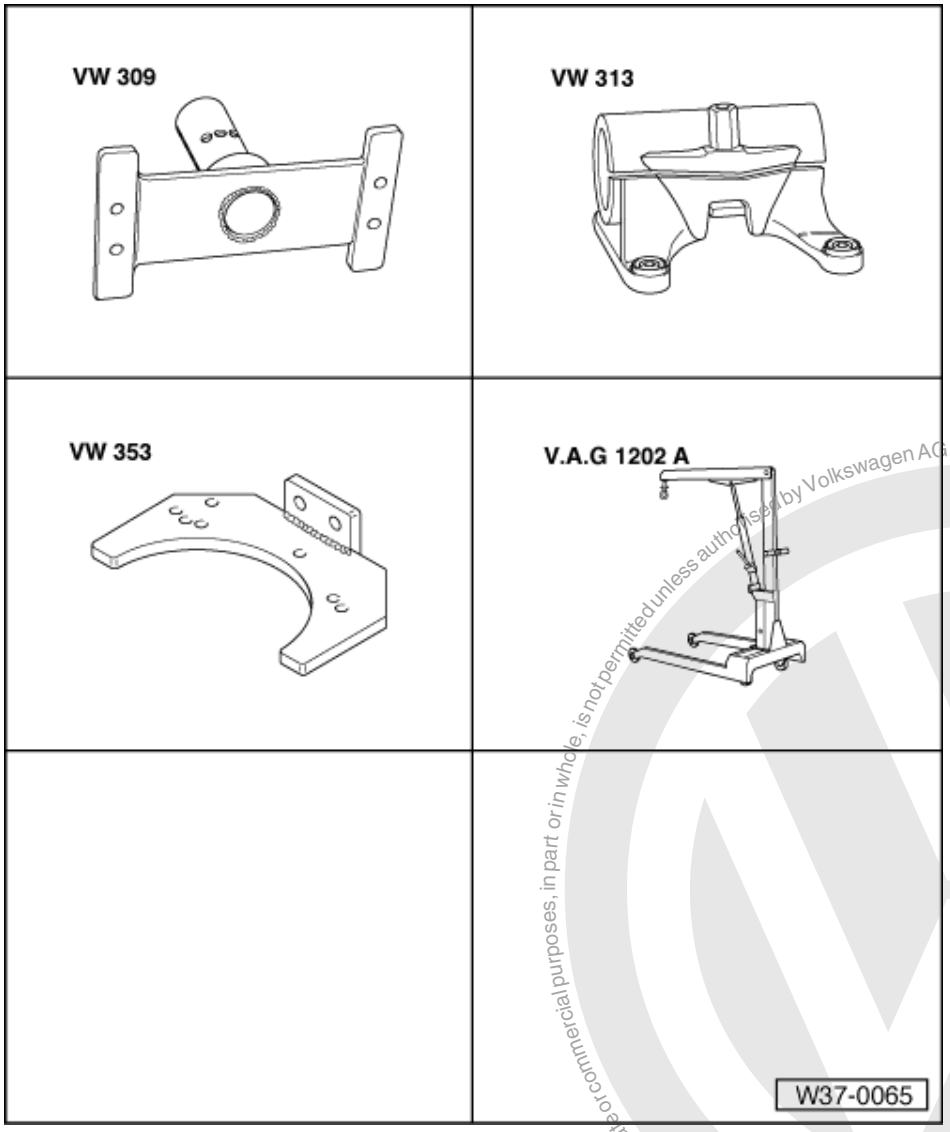

Special tools, workshop equipment, test and measuring appliances and auxiliary items required

- VW 309 Holding plate
- VW 313 Support clamp
- VW 353 Gearbox support
- V.A.G 1202 A Workshop crane

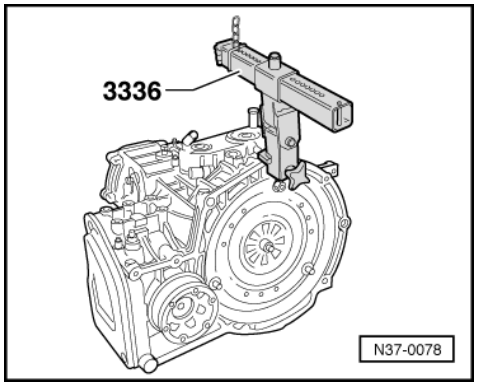

Protected by copyright. Copying for private or commercial purposes, in part or in whole, is not permitted unless authorised by Volkswagen AG. Volkswagen AG does not guarantee or accept any liability with respect to the correctness of information in this document. Copyright by Volkswagen AG.
satelettronica

- -> Secure gearbox lifting tackle 3336 to gearbox housing flange.
- Position pins so that 8 holes are visible in chain direction.
- Insert gearbox with holding plate VW 309 in support clamp VW 313 with the aid of workshop hoist V.A.G 1202 A.

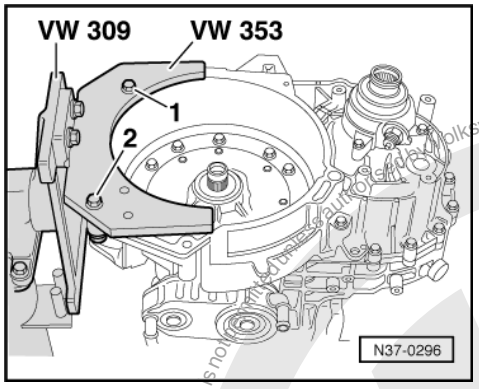

- -> Secure gearbox to assembly support with bolts -1- and -2- (M10).

Protected by copyright. Copying for private or commercial purposes, in part or in whole, is not permitted unless authorised by Volkswagen AG. Volkswagen AG does not guarantee or accept any liability with respect to the correctness of information in this document. Copyright by Volkswagen AG.
satelettronica

5 - Checking ATF level and topping up

5.1 - Checking ATF level and topping up

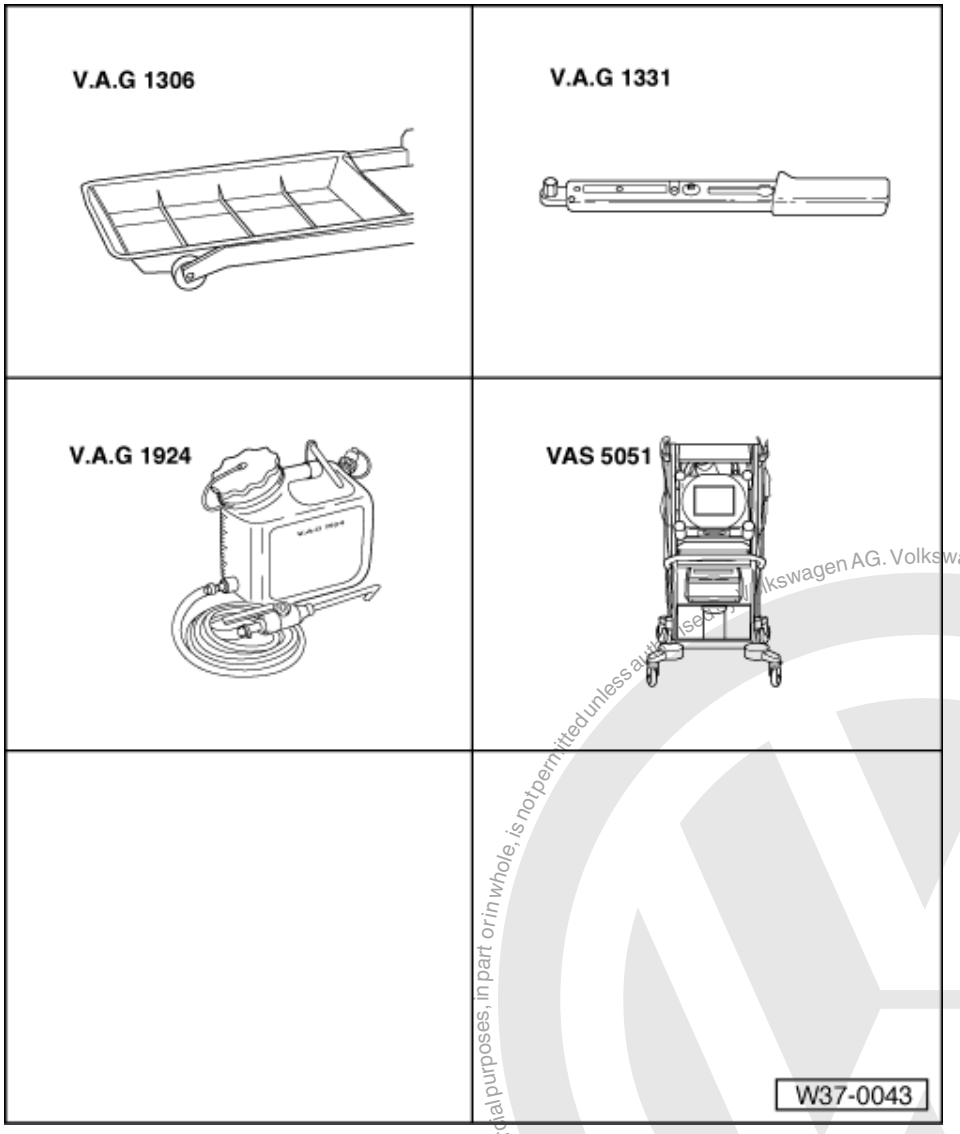

Warning!
Wear eye protection.

Special tools, workshop equipment, test and measuring appliances and auxiliary items required

- V.A.G 1306 Drip tray
- V.A.G 1331 Torque wrench
- V.A.G 1924 Reservoir
- VAS 5051 Vehicle diagnosis, testing and information system
- VAS 5051/3 Diagnosis lead

Additional information required

- Self-study programme no. 202
- Workshop manual Caddy 1996 ▸, Polo Classic 1996 ▸, Polo estate 1998 ▸, Automatic gearbox 01M, self-diagnosis

Protected by copyright. Copyright by Volkswagen AG.
Volkswagen AG does not guarantee or accept any liability with respect to the correctness of information in this document. Copyright by Volkswagen AG.
satelettronica

Checking ATF level

Conditions for performing check

- All electrical consumers and air conditioner must be switched off.
- Gearbox is not in emergency running mode, ATF temperature is not above approx. 30°C
- Vehicle level
- Selector lever at "P", leave engine running at idle

ATF level is affected by ATF temperature.

Checking ATF level at too low ATF temperature leads to overfilling.

Checking ATF level at too high ATF temperature leads to underfilling.

Over and underfilling lead to impaired functioning of gearbox.

VW ATF is obtainable as a spare part.

Container size 0.5 ltr. -Part No. G 052 162 A1

Container size 1.0 ltr. -Part No. G 052 162 A2

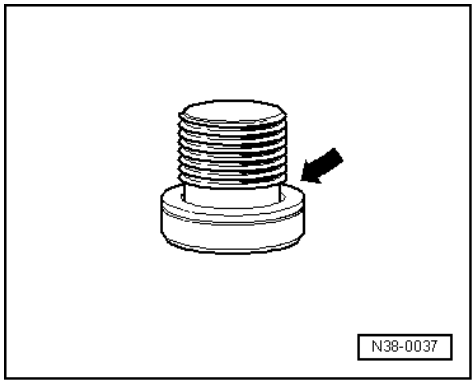

- -> If the ATF level is checked the seal -arrow- on the ATF level plug must always be renewed.
- Remove noise insulation -arrows-.

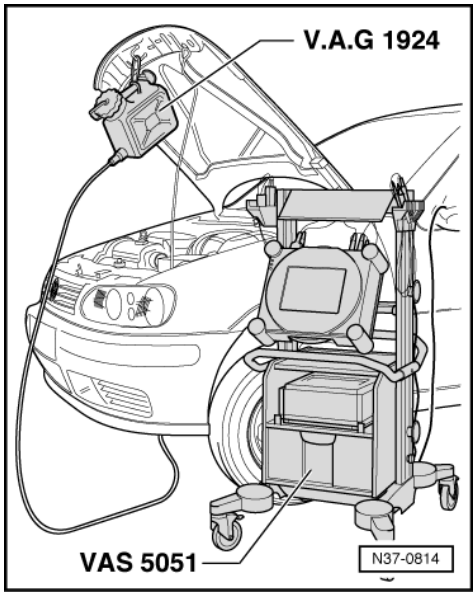

- -> Secure reservoir of ATF filling system V.A.G 1924 to vehicle.

Protected by copyright. Copying for private or commercial purposes, in part or in whole, is not permitted unless authorised by Volkswagen AG. Volkswagen AG does not guarantee or accept any liability with respect to the correctness of information in this document. Copyright by Volkswagen AG.
satelettronica

Locations of diagnosis connections => from page 30 .

- Connect VAS 5051 and progress until the diagnosis functions are displayed.

=> Automatic gearbox 01M, self-diagnosis; Repair group 01; Performing self-diagnosis; Connecting vehicle diagnosis, testing and information system VAS 5051 Performing self-diagnosis Connecting vehicle diagnosis, testing and information system VAS 5051

- Start engine.
- Raise vehicle.
- Place drip tray V.A.G 1306 underneath.
- Press 08 - Read measured value block
- Press keys 0 0 and 2 on display. (002 selects the "Display group number 002".)
- Confirm entry with key Q.

Indicated on display (example)			
Display zones are ordered vertically	Display group No.	Display zone	Description
Read measured value block 0 % 34 % 30.0°C 14.1V	002	1 = 2 = 3 = 4 =	Accelerator pedal value Solenoid valve 6 -N93- (regulation in %) ATF temperature Battery voltage

The third display zone shows the ATF temperature.

The ATF temperature should not be more than approx. 30 °C at the start of the test.

- Bring ATF to test temperature.

Test temperature: 35 °C to 45 °C

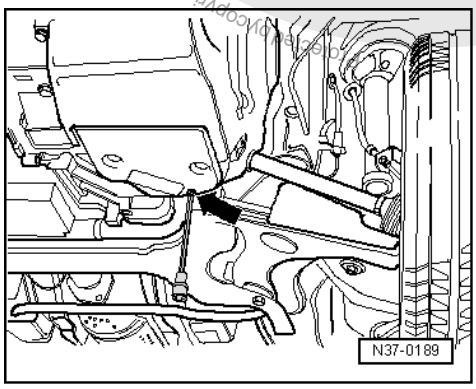

- -> Remove ATF level plug from the oil pan (arrow).

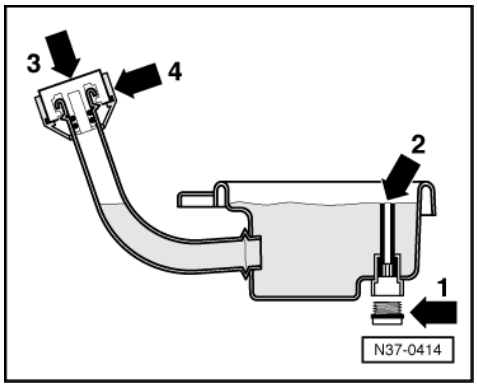

satelettronica

-> The ATF present in the overflow pipe (arrow 2) runs out.

ATF drips out of drilling:

ATF need not be topped up.

- Fit new seal to plug (arrow 1) and tighten to 15 Nm. This completes the ATF check.

If only the ATF present in the overflow pipe runs out of drilling:

Replenishing ATF

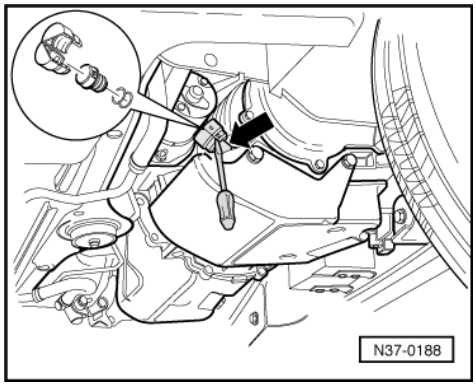

- Lever off plug securing cap -arrow- with a screwdriver. When doing this the cap locking device will be damaged, therefore always renew cap.
- -> Pull plug out of filler pipe.

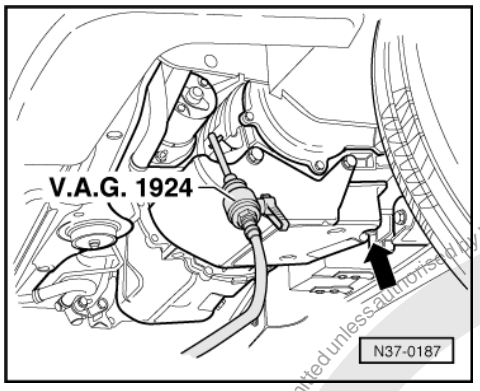

- -> Fill with ATF using V.A.G 1924, until ATF runs out of level hole -arrow-.

Warning!
If the ATF level is too high or too low it will adversely affect the operation of the gearbox.

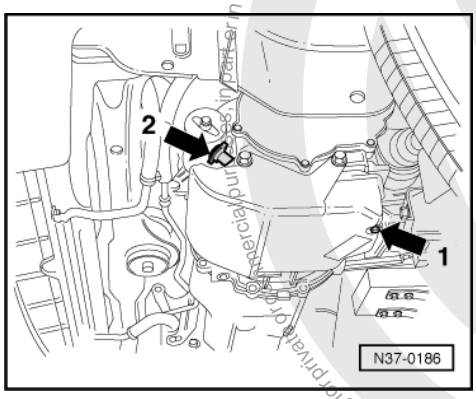

- -> Fit new seal to level plug -arrow 1- and tighten to 15 Nm.
- Fit sealing plug on filler pipe until the spring retainer lock locates, or
- Fit plug on filler pipe and secure with a new cap -arrow 2-.

Protected by copyright. Copying for private or commercial purposes, in part or in whole, is not permitted unless authorised by Volkswagen AG. Volkswagen AG does not guarantee or accept any liability with respect to the correctness of information in this document. Copyright by Volkswagen AG.
satelettronica

- Lock cap.

Warning!
Always renew cap. The cap secures the plug.

- Install noise insulation.

Draining and replenishing ATF

- Remove noise insulation -arrows-.
- Remove noise insulation from left longitudinal member.

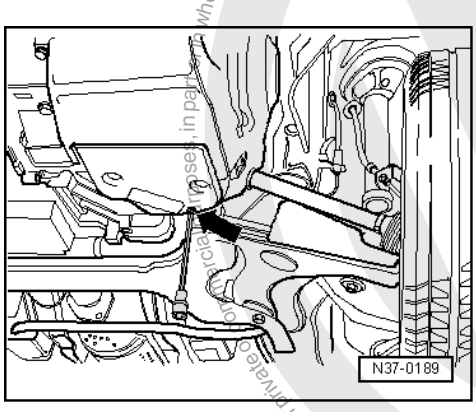

- Place drip tray V.A.G 1306 underneath.
- -> Remove ATF level plug from the oil pan.
- Remove overflow pipe through the level hole.
- Drain ATF.

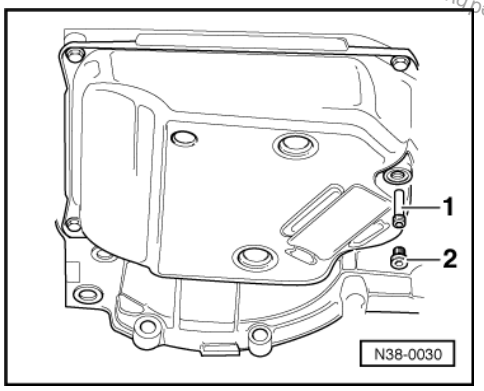

- -> Fit and tighten bolts for overflow pipe -1- => 192 , 2 -overflow pipe.
- After repairs, fit new seal to plug -2- and screw in hand-tight.
- Fill with 3 ltrs. of ATF through filler pipe using V.A.G 1924.
- Shift through all selector lever positions with vehicle stationary, leaving selector lever in each position for about 10 seconds.
- Check and top up ATF level =>Page 72 .

Protected by copyright. Copyright by Volkswagen AG. Volkswagen AG does not guarantee or accept any liability with respect to the correctness of information in this document. Copyright by Volkswagen AG. Reproduction or transmission to third parties, in part or whole, is not permitted unless authorised by Volkswagen AG.
satelettronica

6 - Gearbox with coupling elements

6.1 - Gearbox with coupling elements

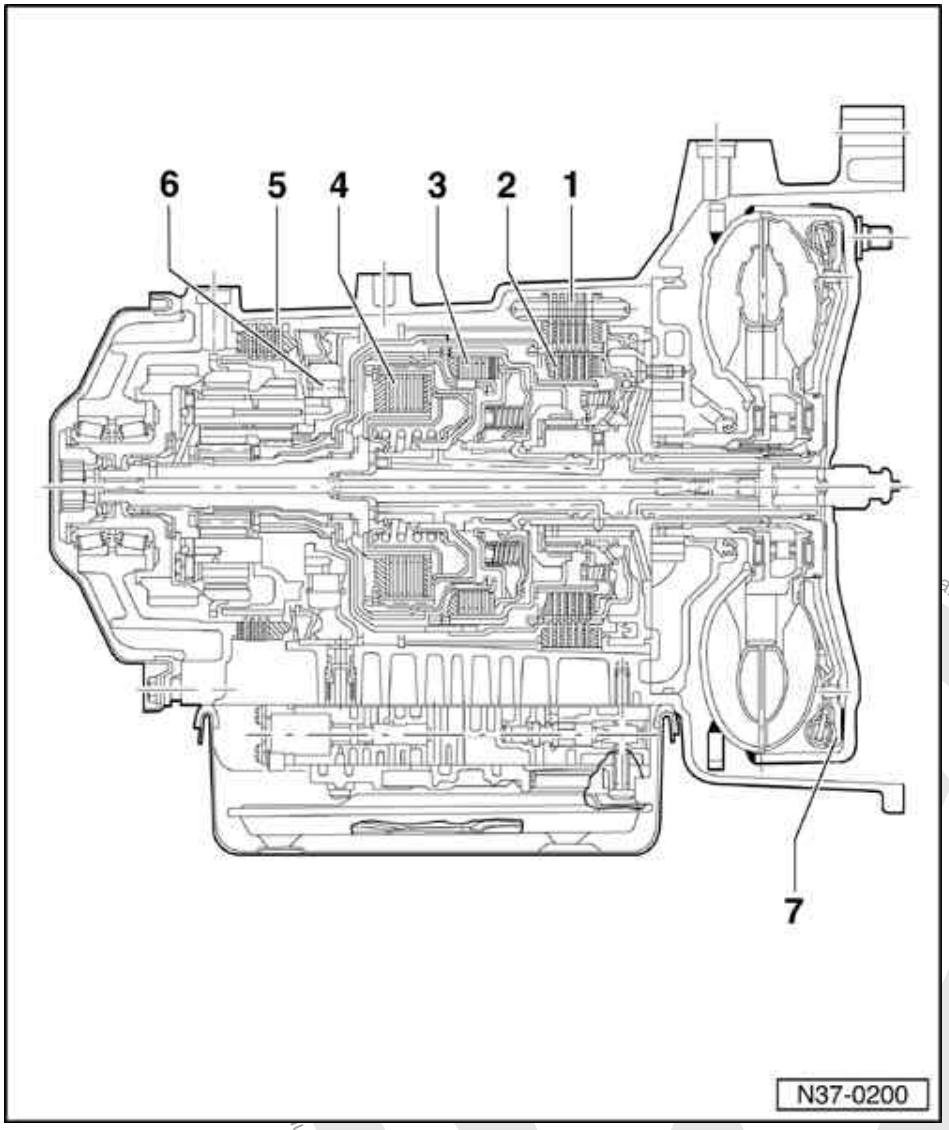

Before making repairs on gearbox, first perform the self-diagnosis.

=> Automatic gearbox 01M self-diagnosis; Repair group 01; Performing self-diagnosis Performing self-diagnosis

Position of coupling elements

1 = 2nd and 4th gear brake -B2-

2 = Reverse gear clutch -K2-

3 = 1st to 3rd gear clutch -K1-

4 = 3rd and 4th gear clutch -K3-

5 = Reverse gear brake -B1-

satelettronica
Protected by copyright. Copying for private or commercial purposes, in part or in whole, is not permitted unless authorised by Volkswagen AG. Volkswagen AG does not guarantee or accept any liability with respect to the correctness of information in this document. Copyright by Volkswagen AG.

6 = Free wheel clutch

7 = Lock-up clutch integrated in torque converter -LC-

6.2 - Position of coupling elements

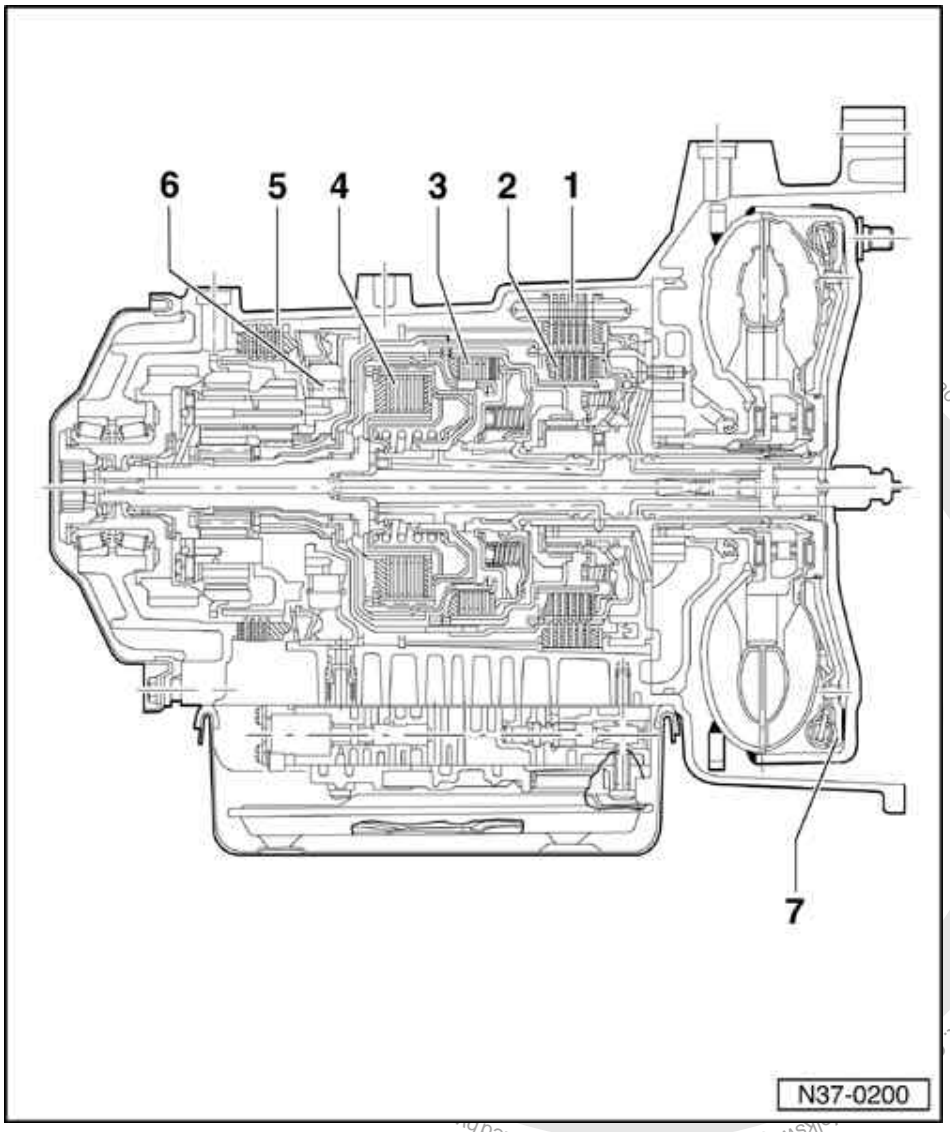

satelettronica

The following table shows which coupling elements are operated in the individual gears to help you deal with complaints regarding poor acceleration and speed performance or generally with drive train faults. The table makes it possible to determine which coupling elements are not operating properly.

All gears will be shifted hydraulically.

All forward gears are driven mechanically at a predetermined load and speed via the torque converter lock-up clutch.

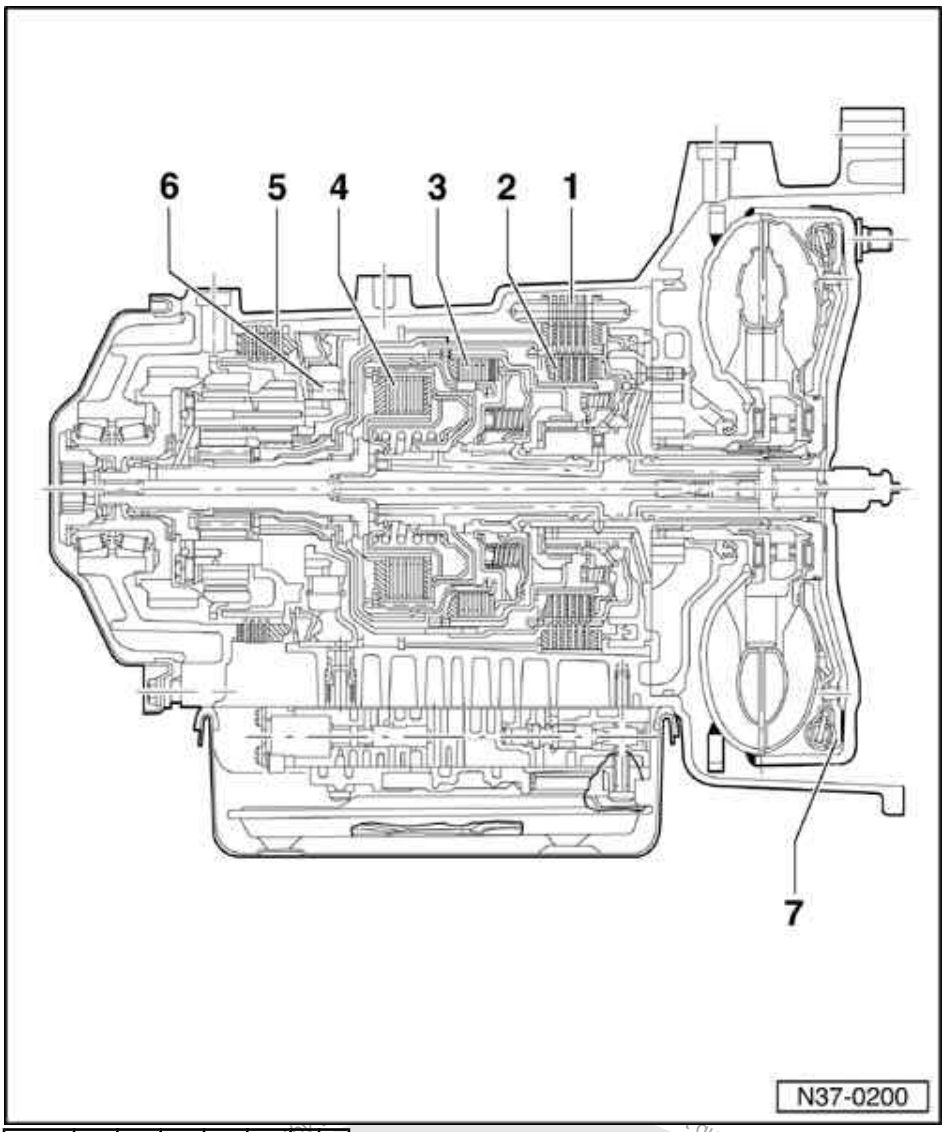

Gear	B1	B2	K1	K2	K3	F	LC
R	X			X			
1H			X			X	
1M			X			X	X
2H		X	X				
2M		X	X				X
3H			X		X		
3M			X		X		X
4H		X			X		
4M		X			X		X

X = clutches, brakes or free wheel engaged
H = hydraulic
M = mechanical

satelettronica
Protected by copyright. Copying for private or commercial purposes, in part or in whole, is not permitted unless authorised by
Copyright by Volkswagen AG.
We do not guarantee or accept any liability with respect to the correctness of information in this document.

7 - Dismantling and assembling gearbox

7.1 - Dismantling and assembling gearbox

Removing and installing ATF cooler and ATF filler tube => Page 81 .

Dismantling and assembling planetary gearbox -Overview- => Page 82 .

Dismantling and assembling planetary gearbox => Page 97 .

Dismantling => Page 97
Assembling => Page 107
Installing exchange components => 120

Overview of all planetary gearbox adjustments => Page 132 .

Removing and installing valve chest => Page 191 .

7.2 - Removing and installing ATF cooler and ATF filler tube

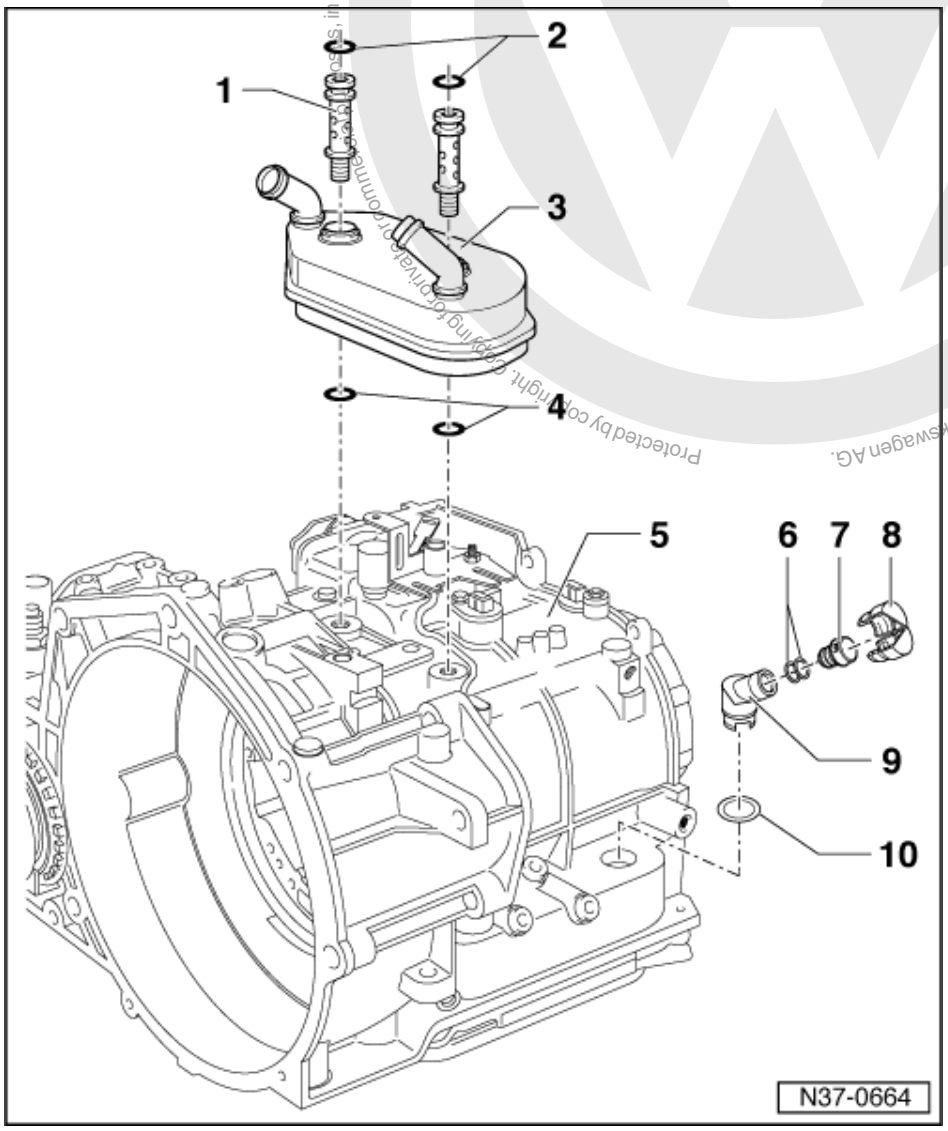

Protected by copyright. Copying for private or commercial purposes, in part or in whole is not permitted unless authorised by Volkswagen AG. Volkswagen AG does not guarantee or accept any liability with respect to the correctness of information in this document. Copyright by Volkswagen AG.
satelettronica

1 Banjo bolt, 35 Nm
2 O-ring
- Always renew

3 ATF cooler
4 O-ring
- Always renew

5 Gearbox housing
6 Seal
- Always renew

7 Plug
8 Cap
- To secure the level plug after checking ATF level => Page 72 always renew

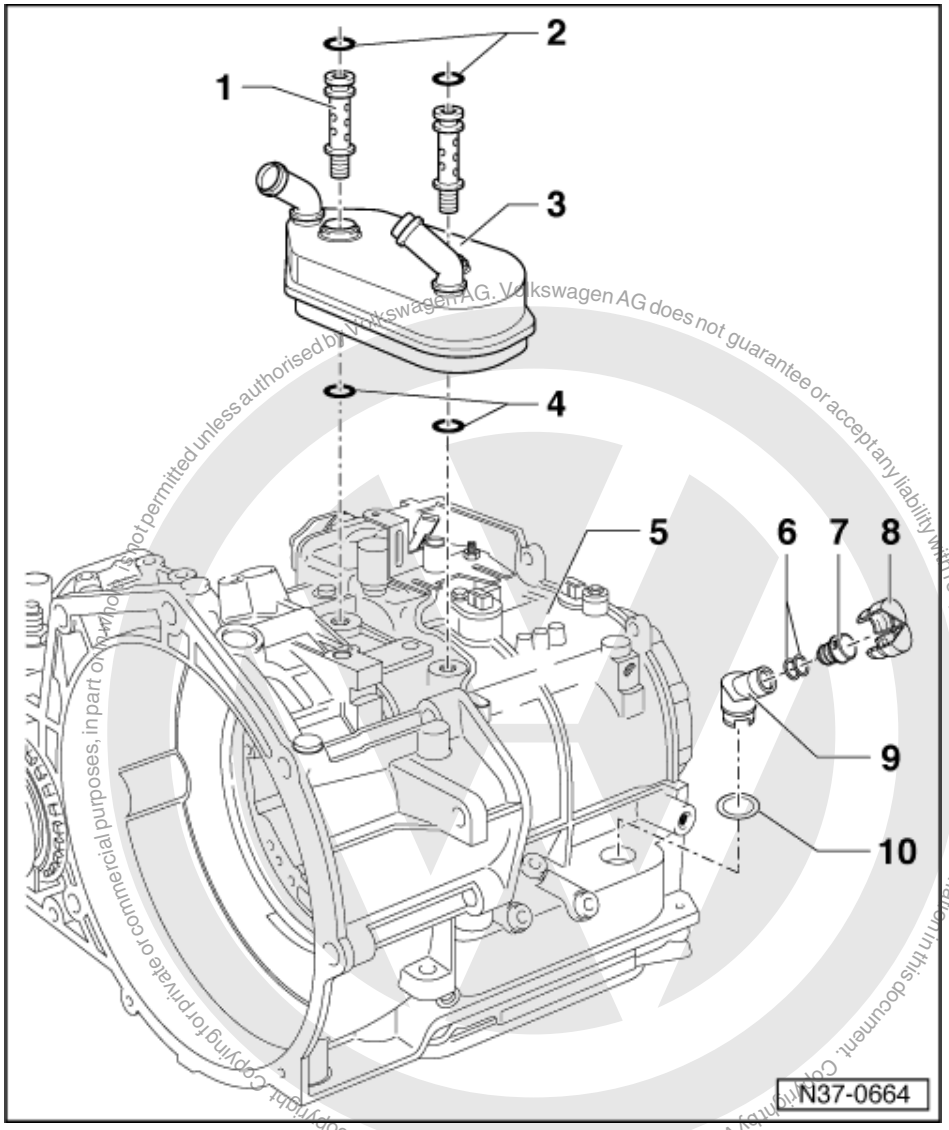

9 ATF filler tube
10 O-ring
- Always renew

satelettronica

7.3 - Dismantling and assembling planetary gearbox -Overview-

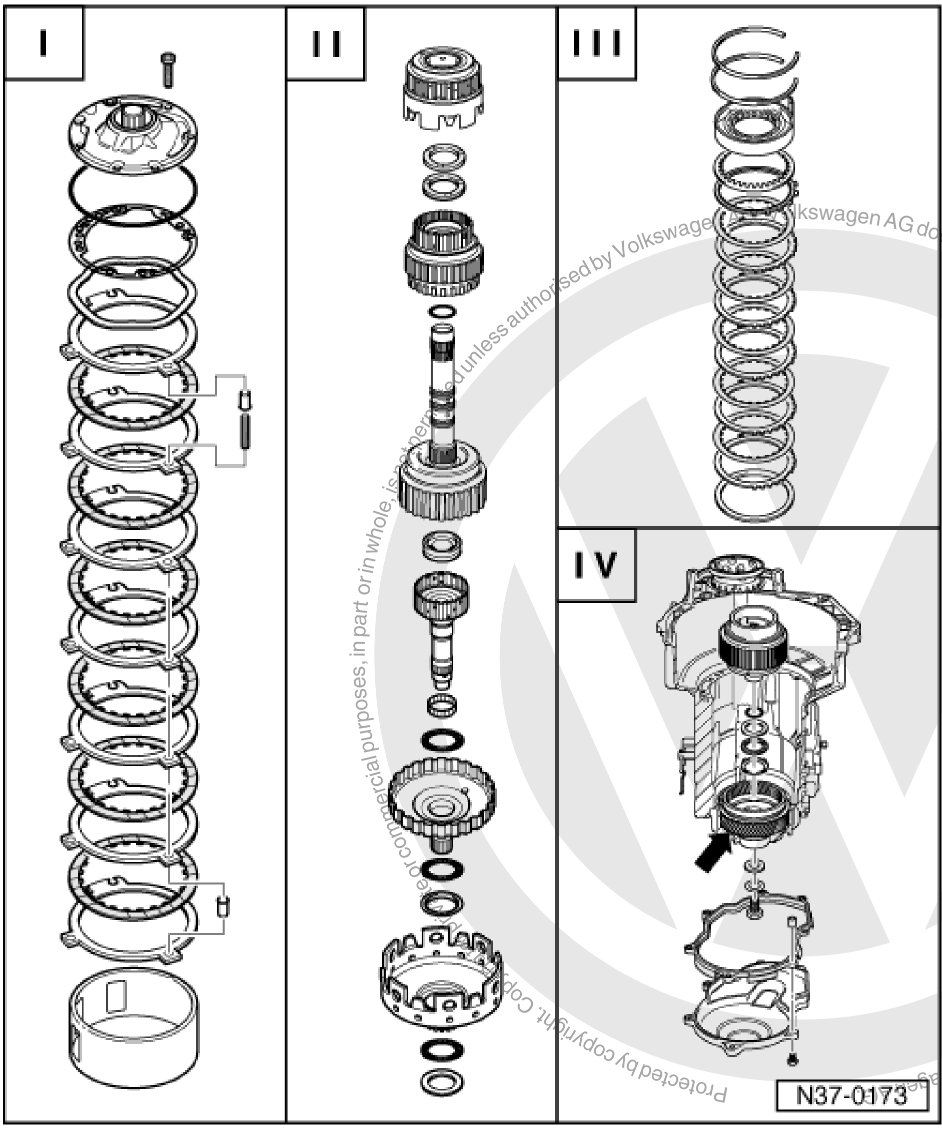

Protected by copyright. Copying for private or commercial purposes, in part or in whole, is not permitted unless authorised by Volkswagen AG. Volkswagen AG does not guarantee or accept any liability with respect to the correctness of information in this document. Copyright by Volkswagen AG.

Dismantling planetary gearbox => 97

Assembling planetary gearbox=> 107

Installing exchange components => 120

- I - Removing and installing ATF pump to support tube => Page 83
- II - Removing and installing reverse clutch -K2- to large sun gear => Page 87
- III - Removing and installing free wheel and reverse gear brake -B1- => Page 91
- IV - Removing and installing planet carrier => Page 94

Input gear -arrow- does not need to be removed.

Removing and installing input gear => 224 .

sateletronica

7.4 - I - Removing and installing ATF pump to supporting tube

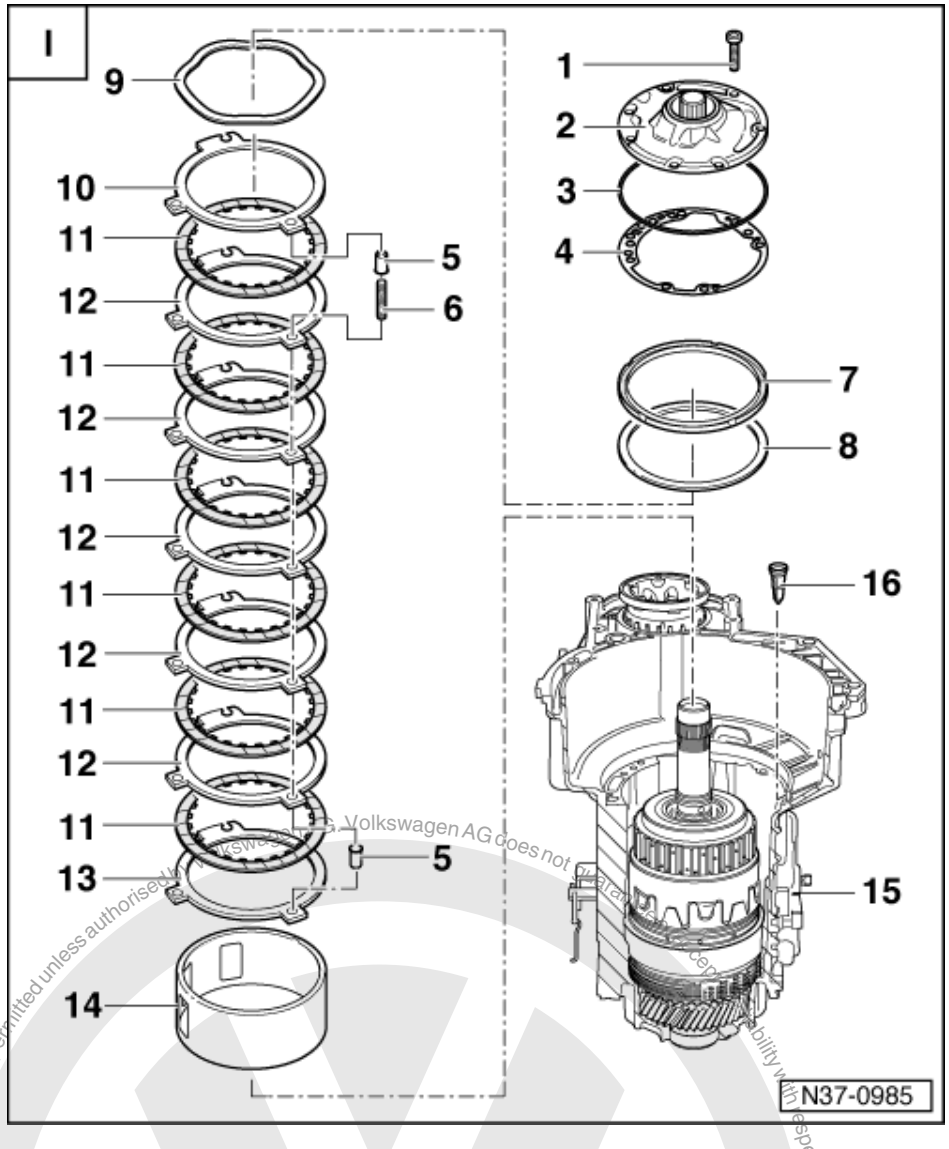

=> Overview, Page 82

Dismantling planetary gearbox => 97

Assembling planetary gearbox=> 107

Installing exchange components => 120

1 Bolt
- Qty. 7
- Tighten to 8 Nm and turn 90° further
- The turning further of 90° may be done in several stages

2 ATF pump with -B2- piston
- Spare part is allocated according to gearbox code letters
- Dismantling and assembling => Page 165

Protected by copyright. Copying for private or commercial purposes, in part or in whole, is not permitted unless authorised by Volkswagen AG. Volkswagen AG does not guarantee or accept any liability with respect to the correctness of information in this document. Copyright by Volkswagen AG.
satelettronica

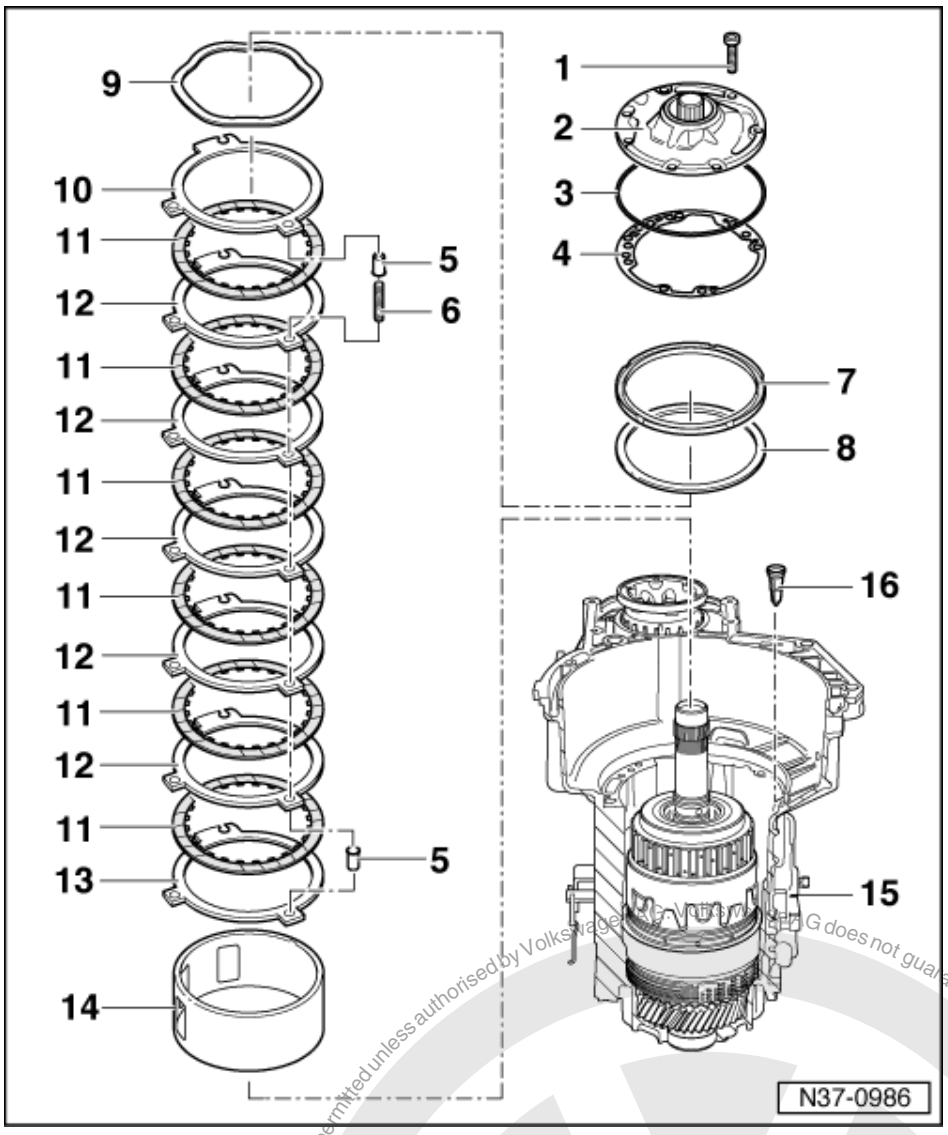

3 O-ring
- Always renew
- Place on ATF pump

4 Gasket
- Always replace

5 Spring cap, Qty. 6
- Install 3 spring caps after installing first outer plate
- Install 3 spring caps before installing last outer plate

6 Spring
- Qty. 3

7 Retaining ring
- Not installed on gearbox CKY

8 Shim
- Not installed on gearbox CKY

Protected by copyright. Copying for private or commercial purposes, in part or in whole, is not permitted unless authorised by Volkswagen AG. Copyright by Volkswagen AG. Volkswagen AG does not guarantee or accept any liability with respect to the correctness of information in this document.
satelettronica

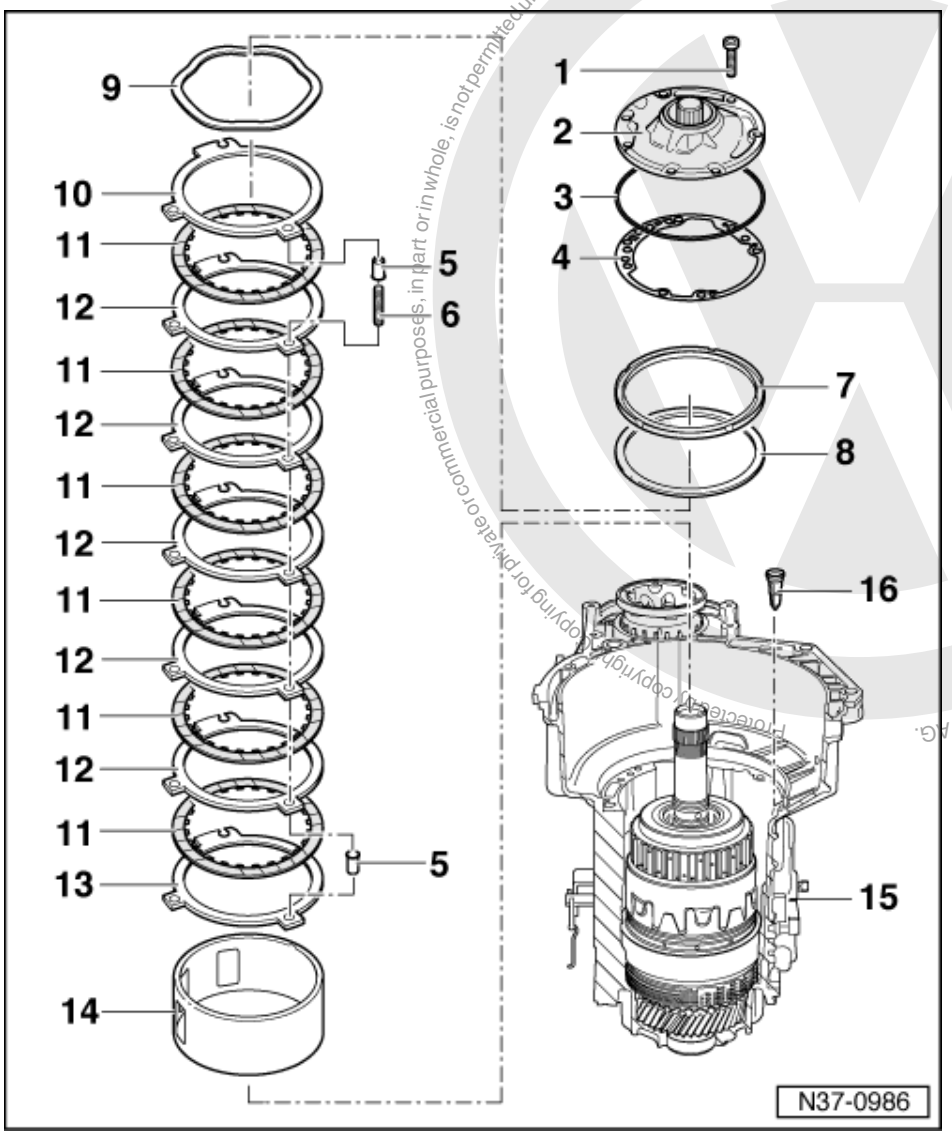

9 Corrugated spring washer
- Only installed on gearbox CKY

10 Outer plate -B2-
- Quantity => from Page 3
- Only on gearbox CKY must the outer plate thickness be determined for adjusting -B2- => Adjusting 2nd and 4th gear brake -B2-, page 152

11 Inner plate -B2-
- Quantity => from Page 3
- Before installing place new inner plates in ATF for 15 minutes

12 Outer plate -B2-
- Always install 2 mm thick outer plates
- Quantity => from Page 3

13 Outer plate -B2-
- Fit 3 mm thick outer plate to supporting tube

Protected by copyright. Copying for private or commercial purposes, in part or in whole, is not permitted unless authorised by Volkswagen AG. Volkswagen AG does not guarantee or accept any liability with respect to the correctness of information in this document. Copyright by Volkswagen AG.
satelettronica

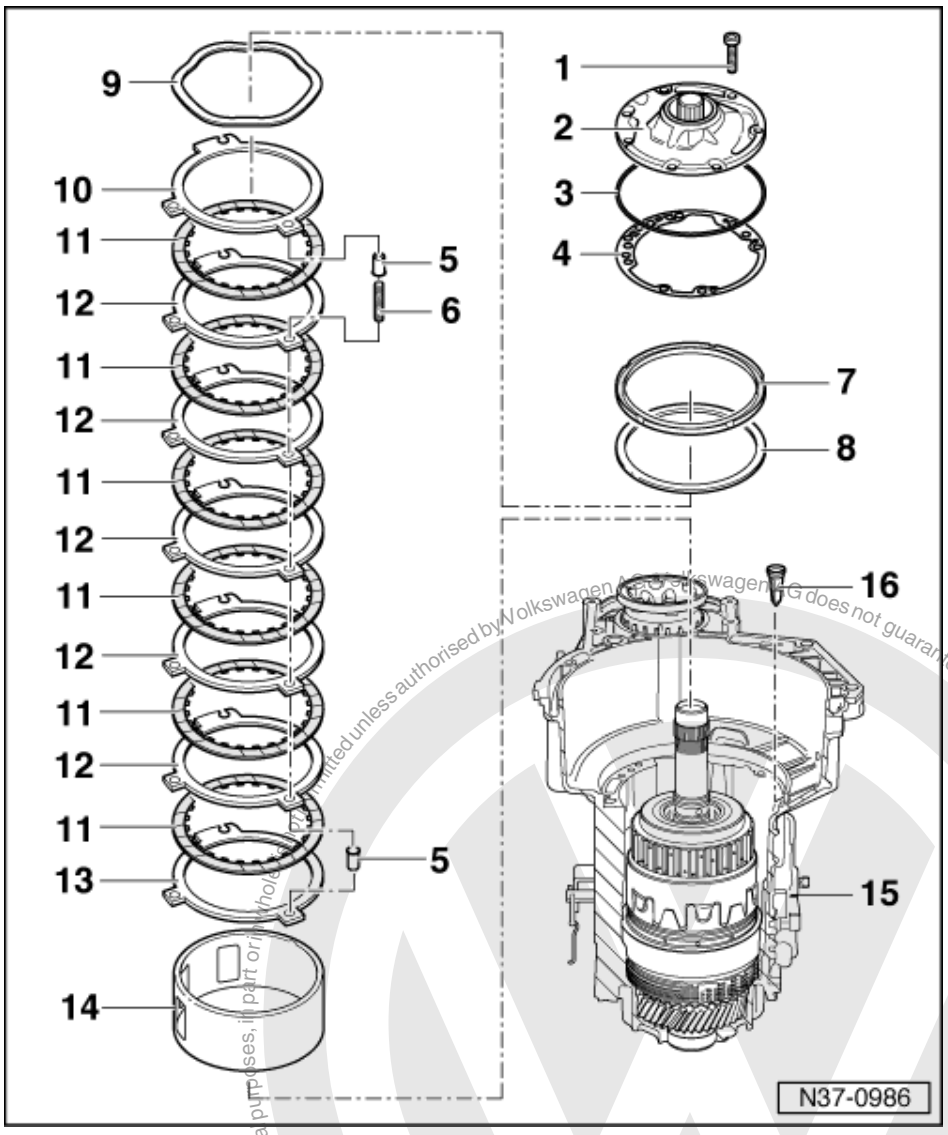

14 Supporting tube -B2-

- For the -B2- plate package
- Insert so that groove engages in wedge of free wheel
- Spare part is allocated according to gearbox code letters

15 Gearbox housing with clutches installed

16 Strainer

- Not present in all gearboxes
- Installation position: in ATF cooler return line => 101 , fig. N37-0825
- There must be a suitable recess in the gearbox housing -item 15 - for installation of the strainer.

Protected by copyright. Copying for private or commercial purposes, in part or in whole, is not permitted unless authorised by Volkswagen AG. Volkswagen AG does not guarantee or accept any liability with respect to the correctness of information in this document. Copyright by Volkswagen AG.
satelettronica

7.5 - II - Removing and installing reverse gear clutch -K2- to large sun gear

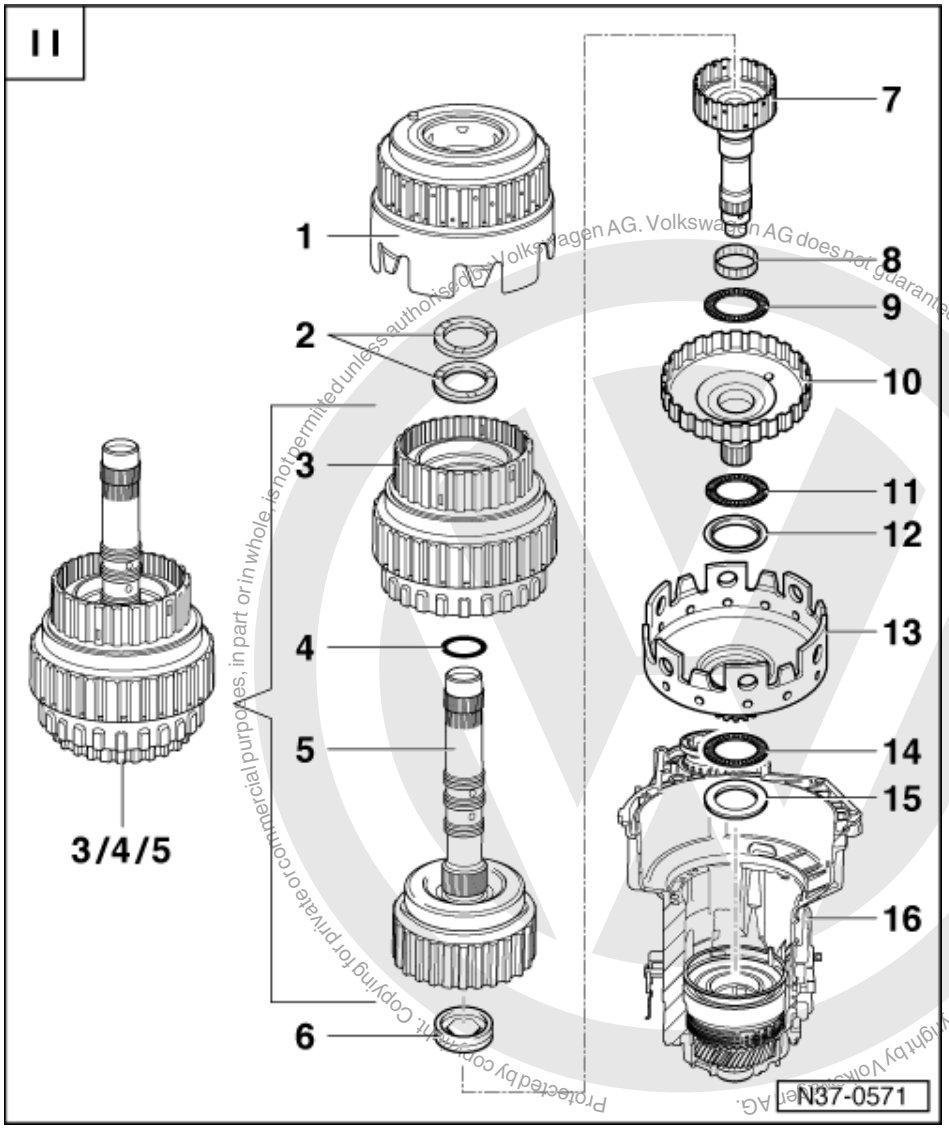

=> Overview, Page 82

Dismantling planetary gearbox => 97

Assembling planetary gearbox=> 107

Installing exchange components => 120

1 Reverse gear clutch -K2-
- Dismantling and assembling =>Page 179

2 Shim
- Determining thickness => Adjusting clutch play between -K1- and -K2-, Page 146
- Up to 3 shims can be installed

satelettronica

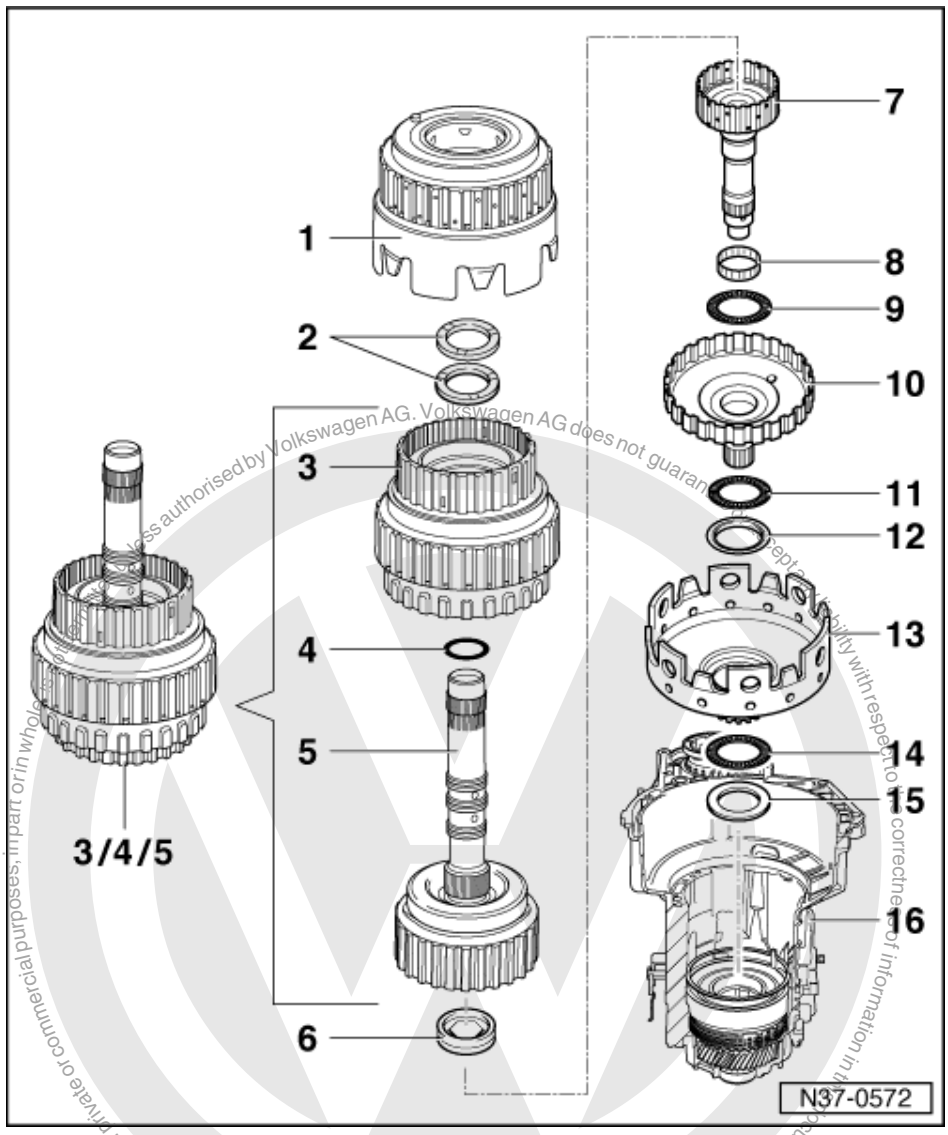

3 1st to 3rd gear clutch -K1-

- Spare part is allocated according to gearbox code letters
- On some gearboxes the clutches -K1- and -K3- may be pressed together
- Pressing -K1- off -K3- => Page 103
- Dismantling and assembling => Page 173
- Pressing -K1- onto -K3- => Page 104

4 Seal

- Always renew
- To renew O-ring, press -K1- off -K3- => Page 103

satelettronica

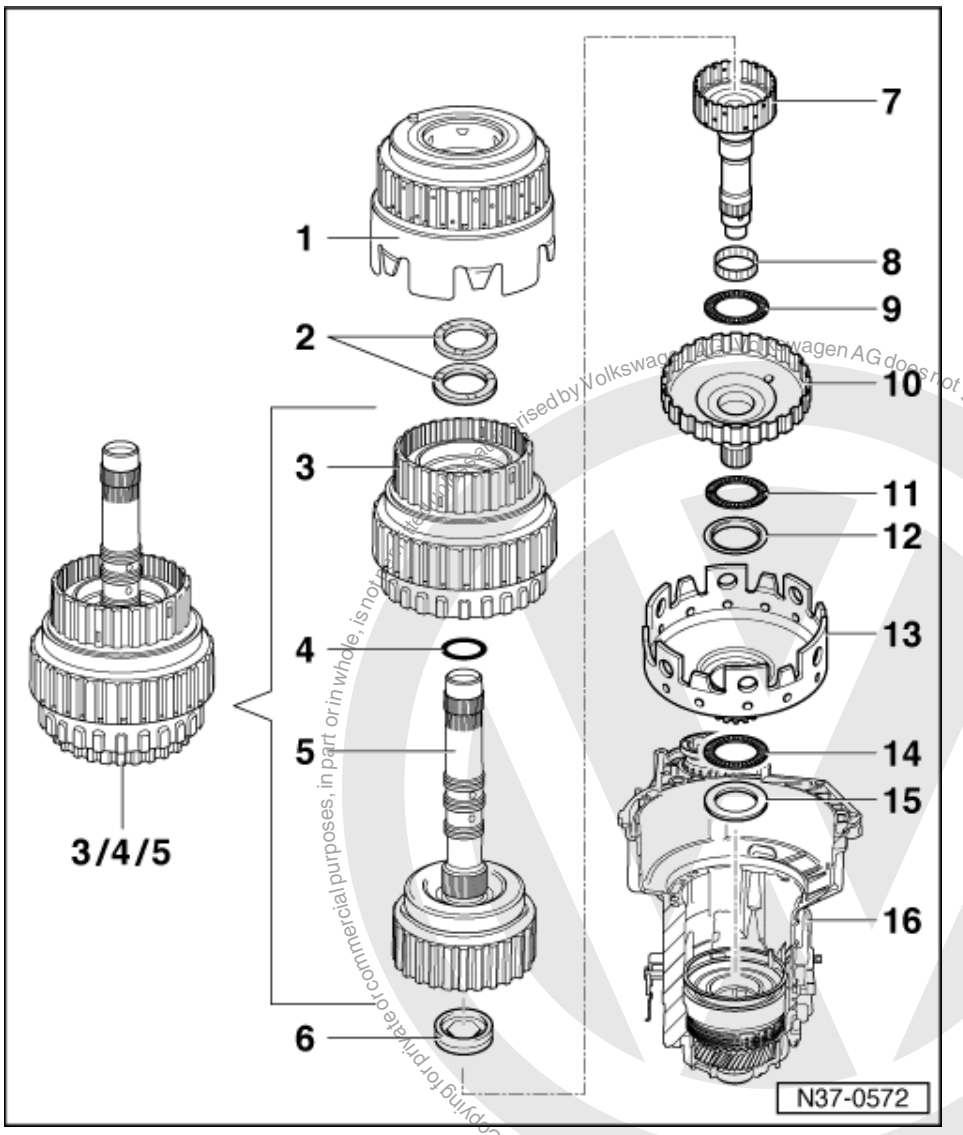

5 3rd and 4th gear clutch -K3- with turbine shaft
- Spare part is allocated according to gearbox code letters
- On some gearboxes the clutches -K1- and -K3- may be pressed together
- Pressing -K1- off -K3- => Page 103
- Dismantling and assembling => Page 183
- Pressing -K1- onto -K3- => Page 104
- There are two different versions => Page 16

6 Axial needle bearing with washer
- Washer faces towards -K3-

7 Small input shaft

8 Needle bearing

9 Axial needle bearing

satelettronica

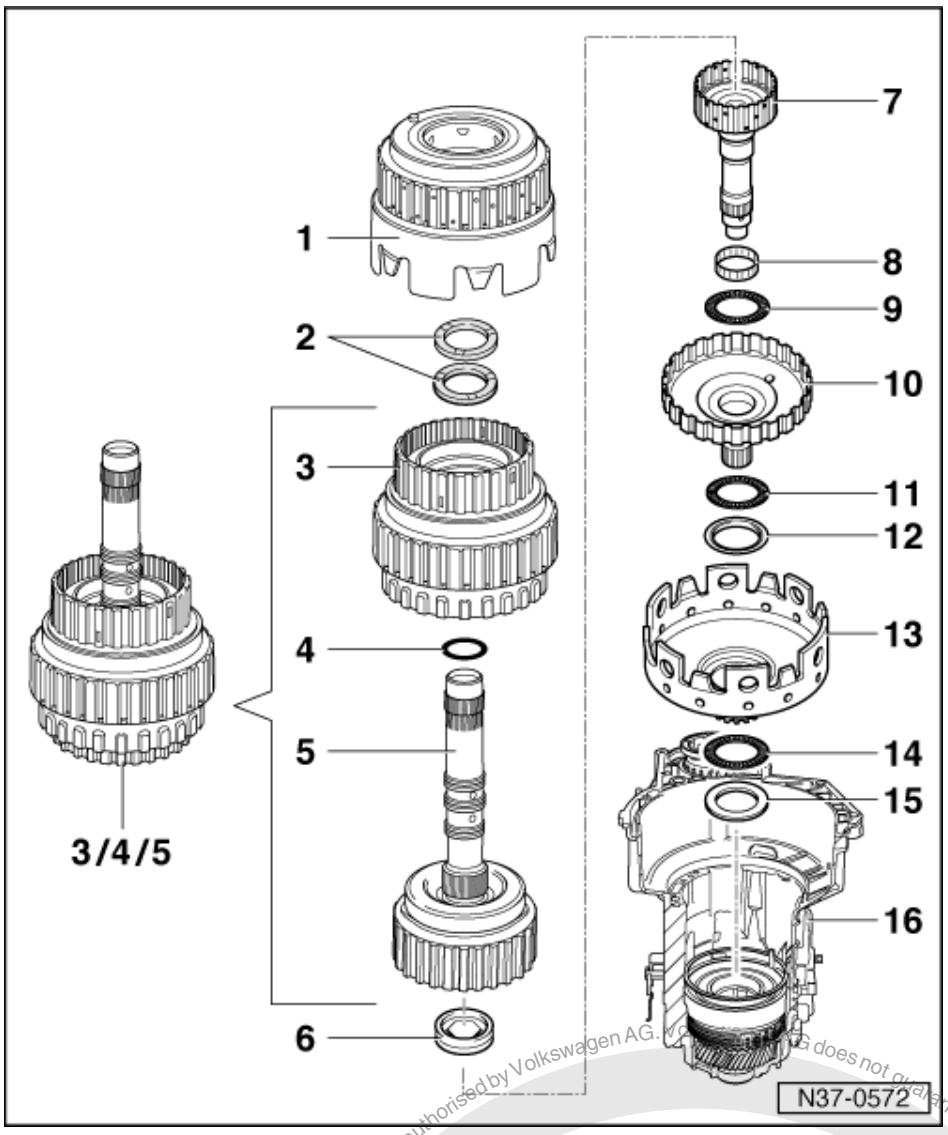

10 Large input shaft
11 Axial needle bearing
12 Axial needle bearing washer
- with collar facing large sun gear

13 Large sun gear
14 Axial needle bearing
15 Axial needle bearing washer
16 Gearbox housing with free wheel and circlips installed

satelettronica

Protected by copyright. Copying for private or commercial purposes, in part or entirely, is not permitted unless authorised by Volkswagen AG. Volkswagen AG does not guarantee or accept any liability with respect to the correctness of information in this document. Copyright by Volkswagen AG.

7.6 - III - Removing and installing freewheel and reverse gear brake -B1-

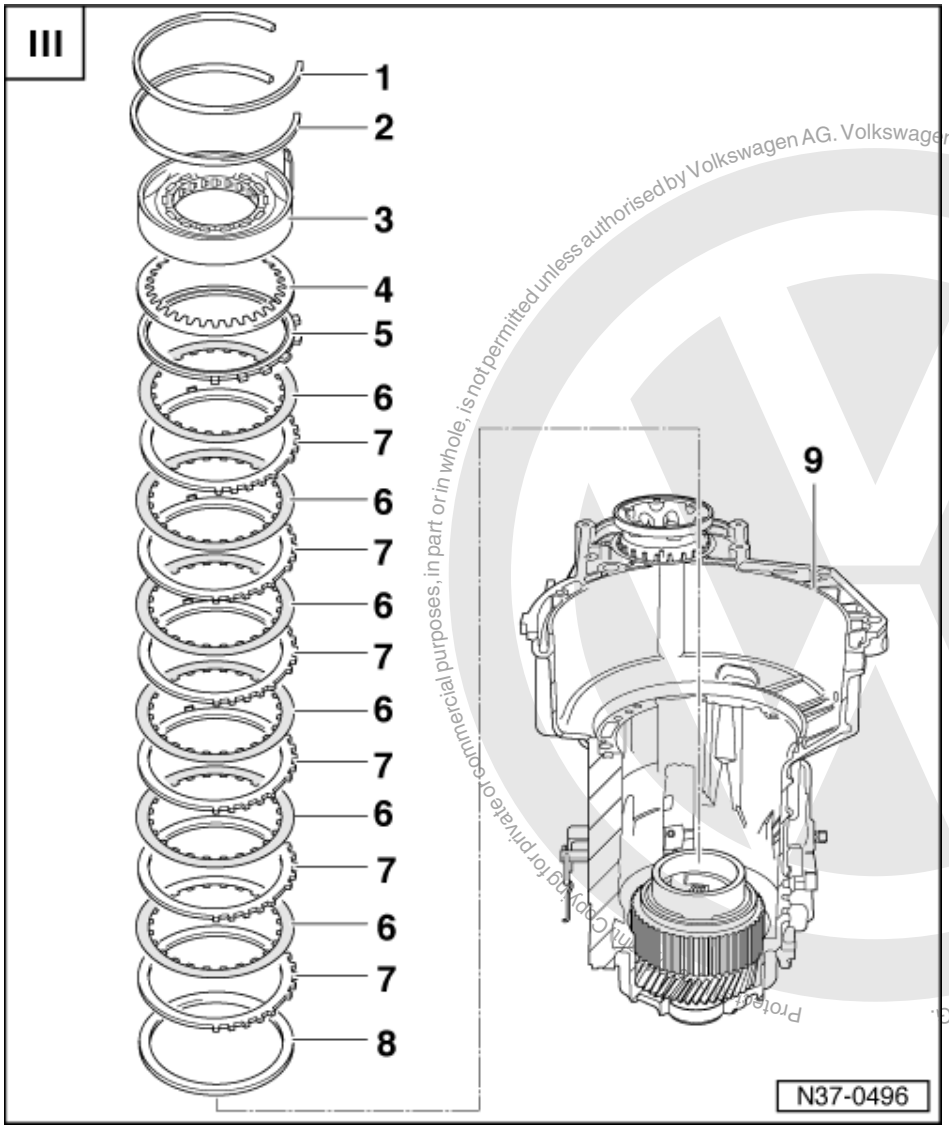

=> Overview, Page 82

Dismantling planetary gearbox => 97

Assembling planetary gearbox=> 107

Installing exchange components => 120

1 Circlip
- For supporting tube -B2-
- Installation position: Circlip open ends faces free wheel retaining wedge

2 Circlip
- For freewheel
- Installation position: Circlip open ends faces free wheel retaining wedge

Protected by copyright. Copying for private or commercial purposes, in part or in whole, is not permitted unless authorised by Volkswagen AG. Volkswagen AG does not guarantee or accept any liability with respect to the correctness of information in this document. Copyright by Volkswagen AG.
satelettronica

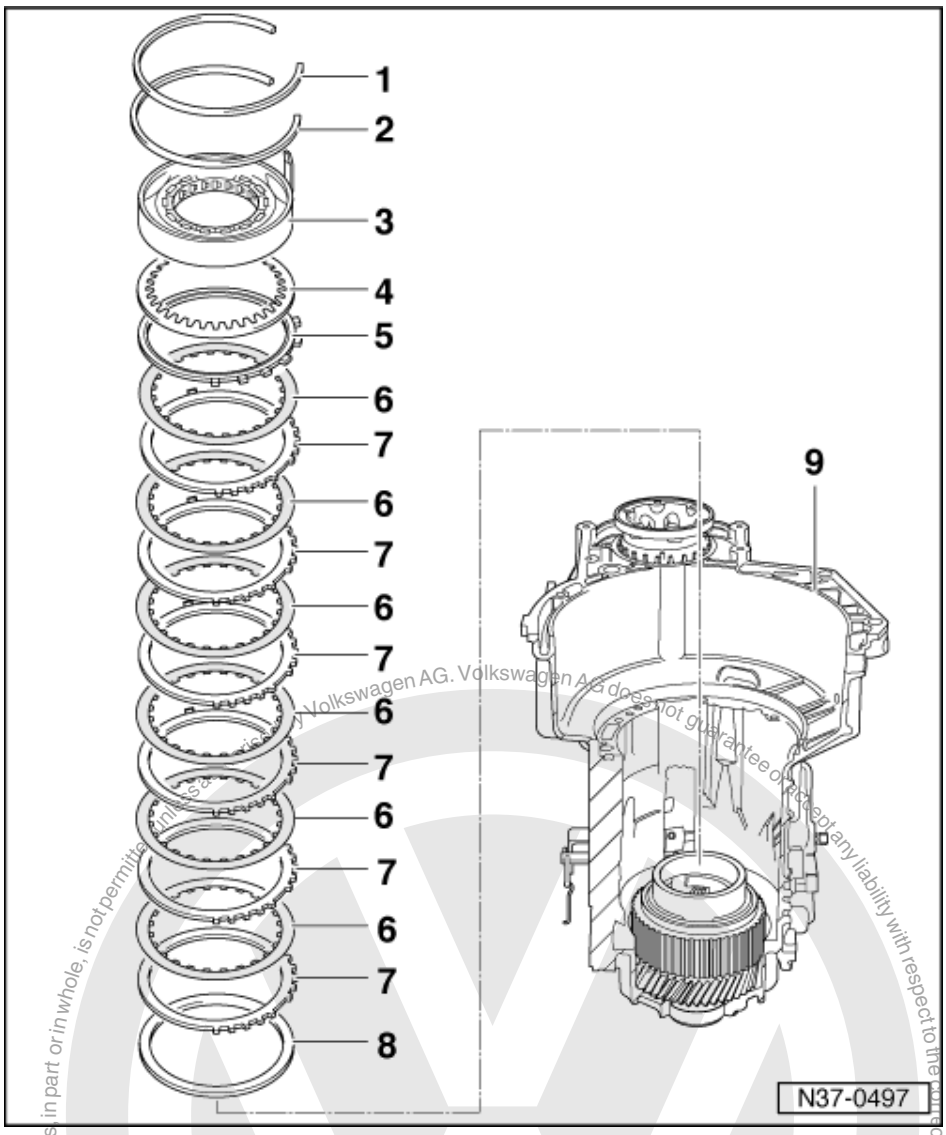

3 Freewheel with -B1- piston
- Before removing free wheel, remove valve chest and sealing plugs => Page 191
- Dismantling and assembling => Page 170

4 Dished spring
- Install with convex facing freewheel

5 Pressure plate -B1-
- Install with flat side facing plates
- Spare part is allocated according to gearbox code letters

6 Inner plate, -B1-
- Quantity of inner plates -B1- =>from Page 3
- Before installing place plates in ATF for 15 minutes

Protected by copyright. Copyright by Volkswagen AG. Volkswagen AG does not guarantee or accept any liability with respect to the correctness of information in this document. Copyright by Volkswagen AG.
satelettronica

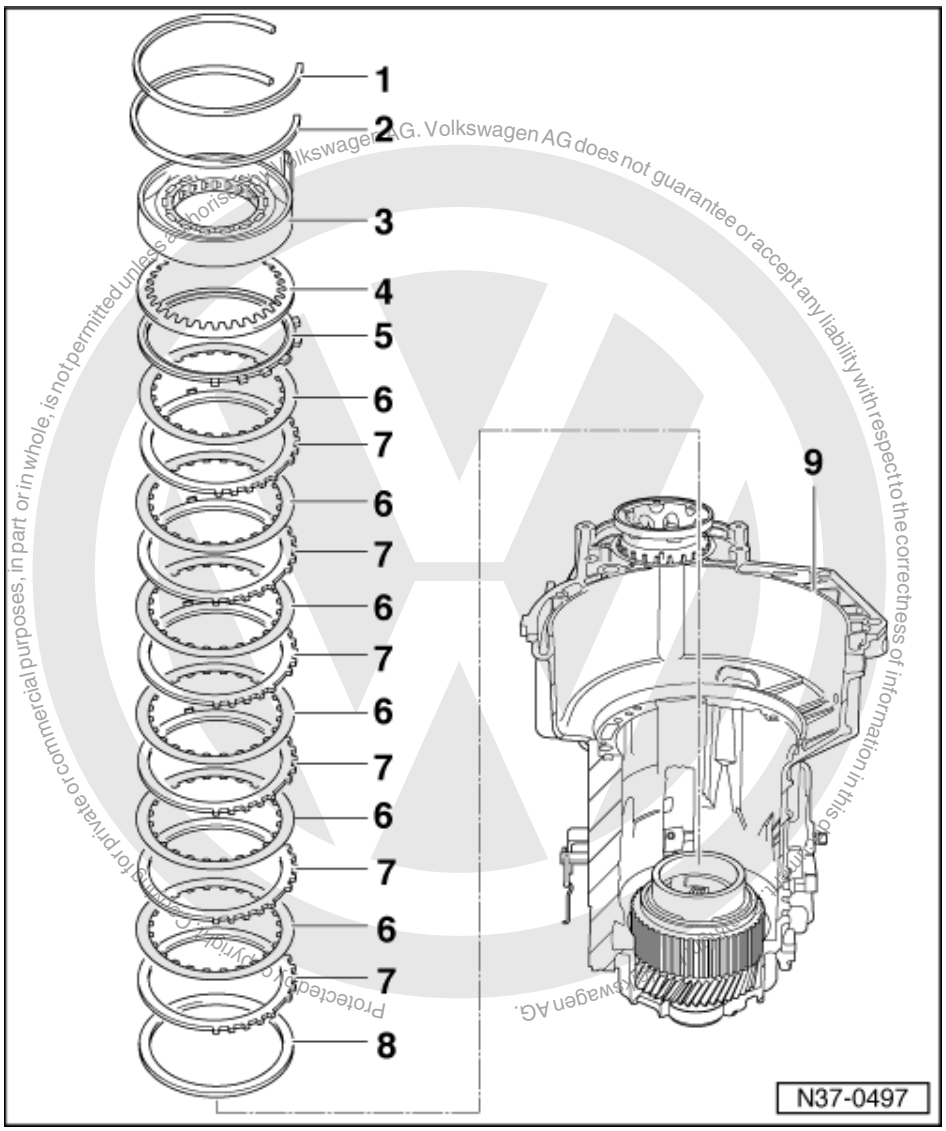

7 Outer plate, -B1-
- Quantity of outer plates -B1- =>from Page 3

8 Shim
- Determining thickness => Page 140 , adjusting reverse gear brake -B1-

9 Gearbox housing with planet carrier installed

satelettronica

7.7 - IV - Planet carrier and gearbox housing with input gear and cover

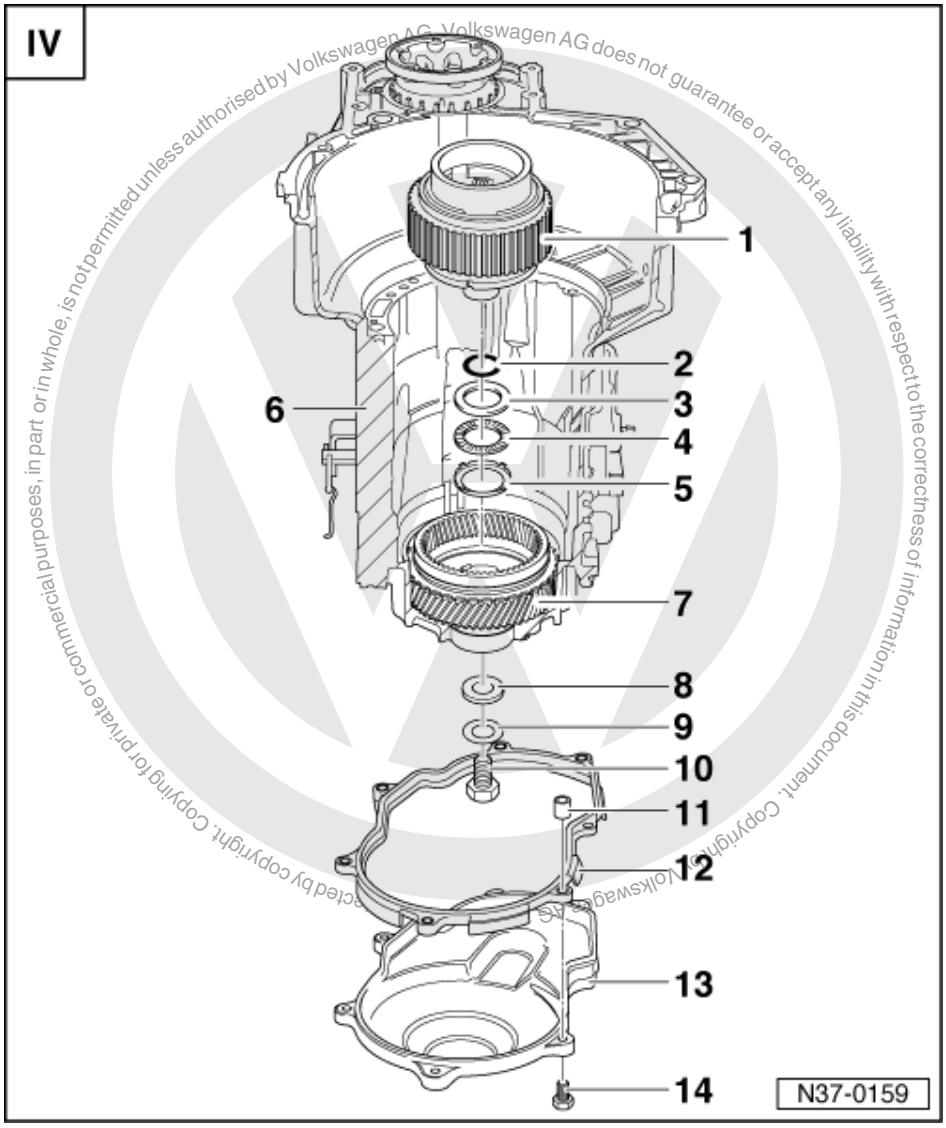

=> Overview, Page 82

Dismantling planetary gearbox => 97

Assembling planetary gearbox=> 107

Installing exchange components => 120

1 Planet carrier
- Adjusting => Page 133

2 O-ring
- Always replace
- Insert in planet carrier

3 Axial needle bearing washer

4 Axial needle bearing

satelettronica

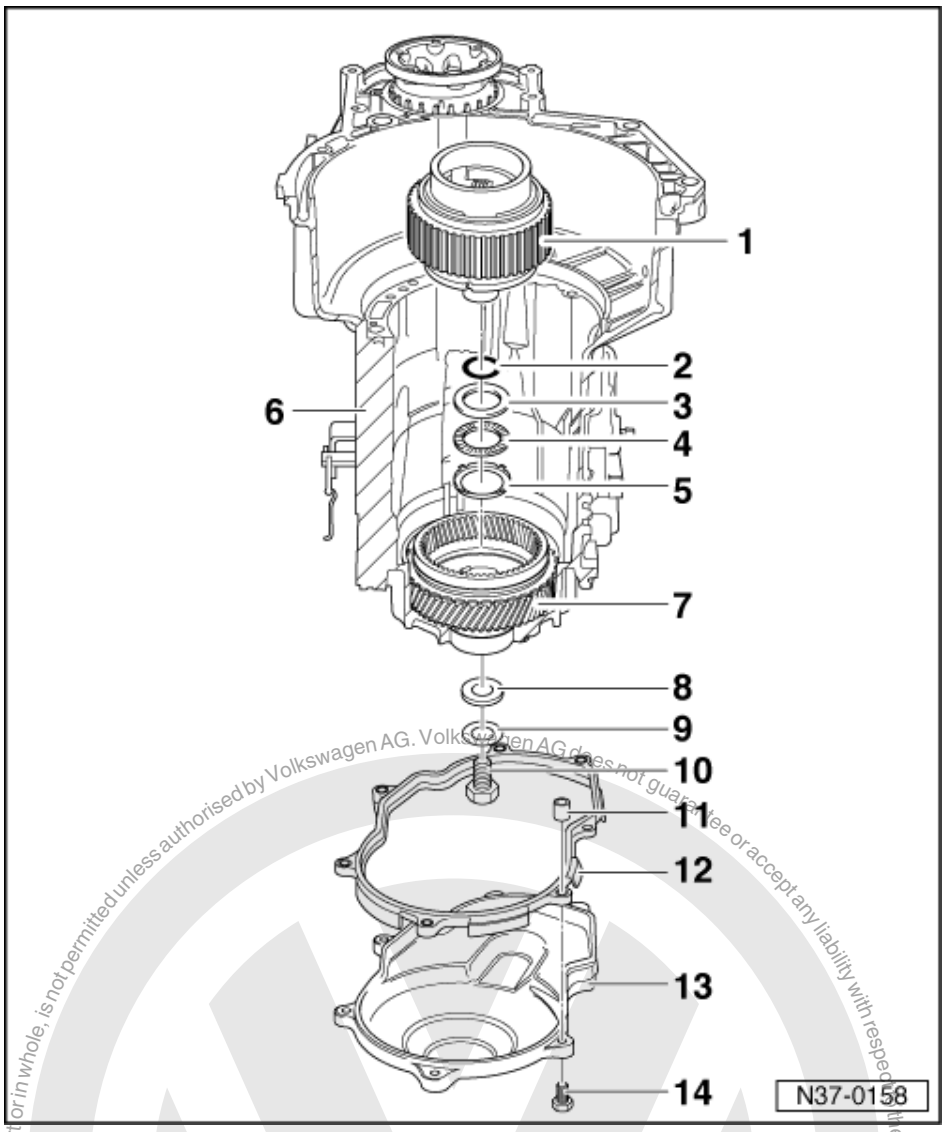

5 Axial needle bearing washer
- Install smooth side in input gear

6 Gearbox housing with input gear installed

7 Input gear
- Do not remove to dismantle planetary gearbox
- Removing and installing input gear or axial needle bearing for planet carrier => Page 224

8 Planet carrier shim
- Determining thickness, => Adjusting planet carrier, Page 133

9 Washer

10 Bolt, 30 Nm
- For small input shaft

Protected by copyright. Copyright by Volkswagen AG.
Copyright of this document, in part or in whole, is not permitted unless authorised by Volkswagen AG. Volkswagen AG does not guarantee or accept any liability with respect to the correctness of information in this document. Copyright by Volkswagen AG.
satelettronica

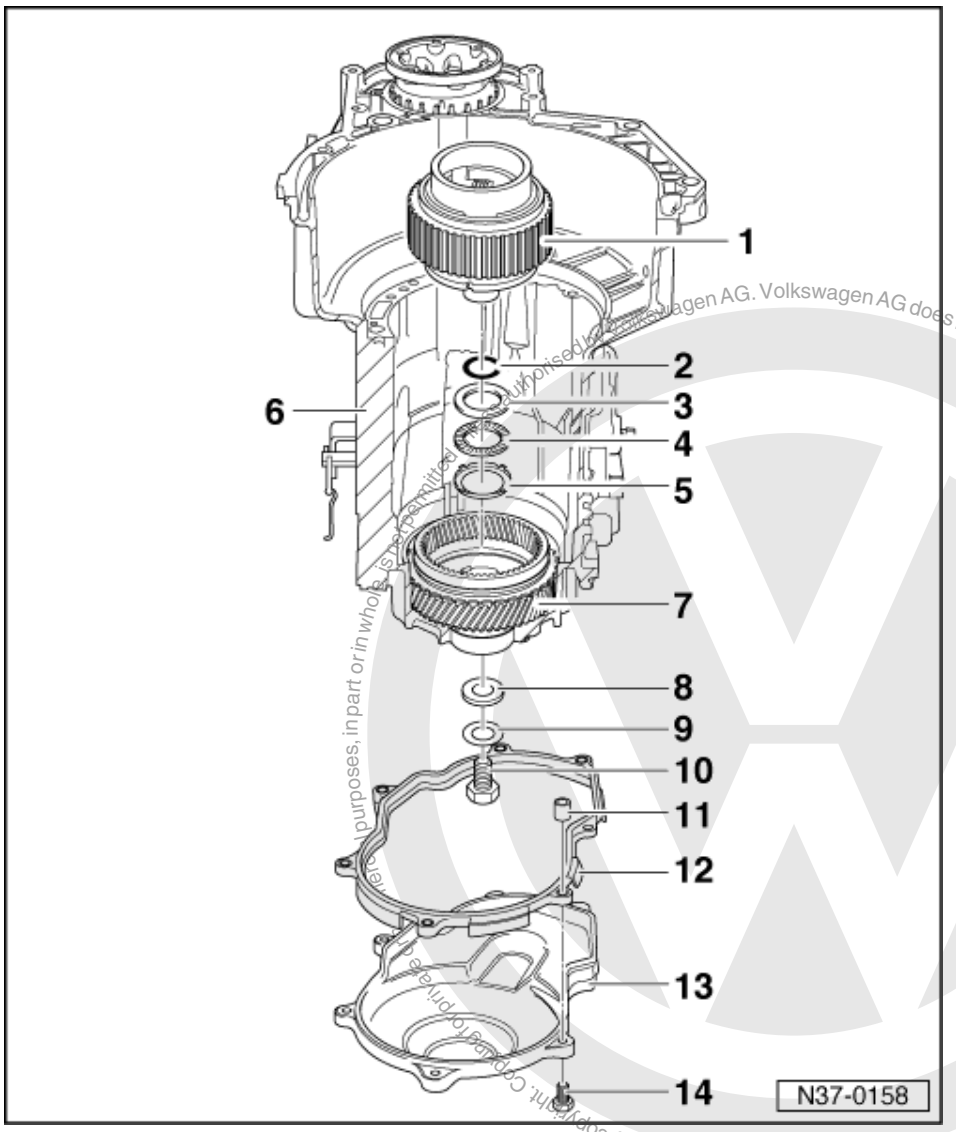

11 Spacer bush
- Clip qty. 7 into gasket

12 Gasket
- Always replace

13 Cover

14 Bolt, 8 Nm

Protected by copyright. Copying for private and commercial purposes, in part or in whole, is not permitted unless authorised by Volkswagen AG. Volkswagen AG does not guarantee or accept any liability with respect to the correctness of information in this document. Copyright by Volkswagen AG.
satelettronica

7.8 - Dismantling planetary gearbox

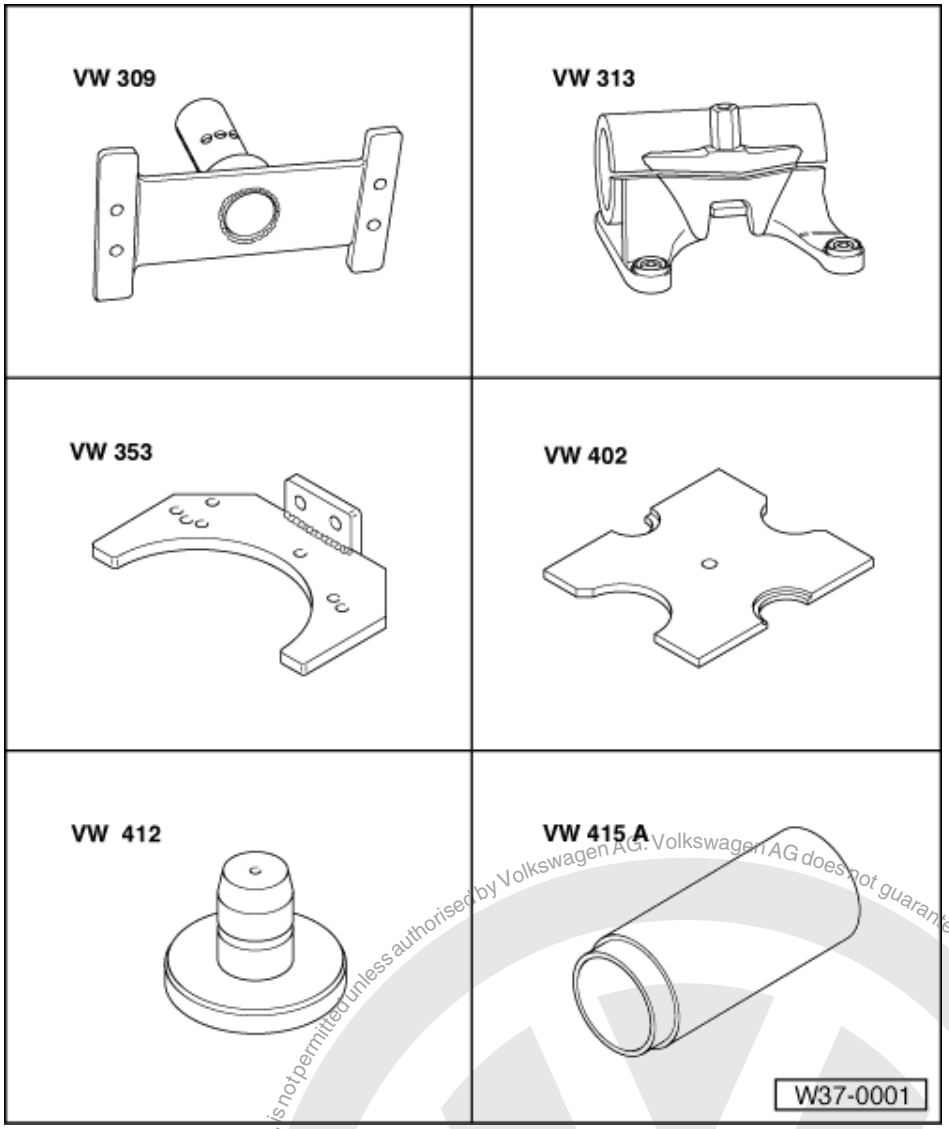

Special tools, workshop equipment, test and measuring appliances and auxiliary items required

- VW 309 Holding plate
- VW 313 Support clamp
- VW 353 Gearbox support
- VW 402 Thrust plate
- VW 412 Press tool
- VW 415 A Tube

Protected by copyright. Copying for private or commercial purposes, in part or in whole, is not permitted unless authorised by Volkswagen AG. Volkswagen AG does not guarantee or accept any liability with respect to the correctness of information in this document. Copyright by Volkswagen AG.
satelettronica

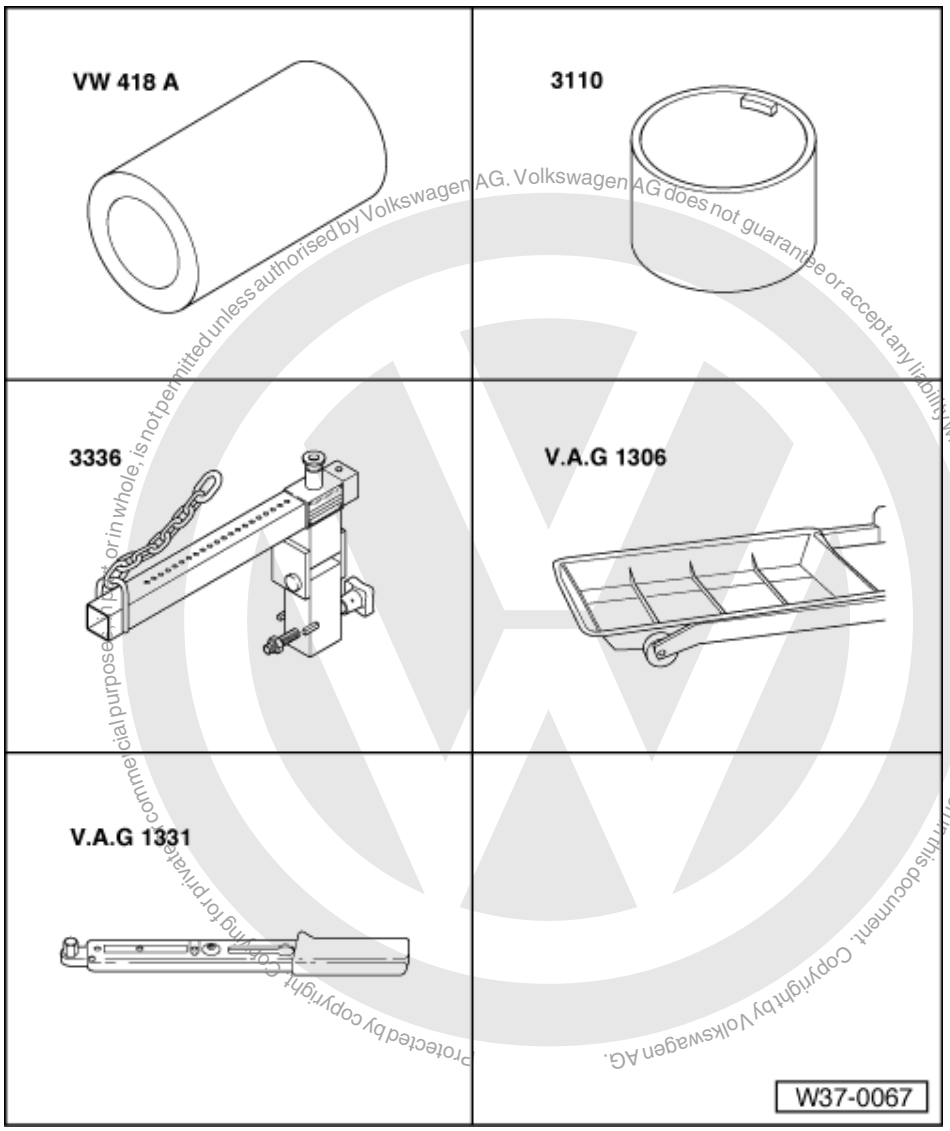

Protected by copyright. Copying for private or commercial purposes, in whole or in part, is not permitted unless authorised by Volkswagen AG. Volkswagen AG does not guarantee or accept any liability with respect to the correctness of information in this document. Copyright by Volkswagen AG.

satelettronica

Special tools, workshop equipment, test and measuring appliances and auxiliary items required

- VW 418 A Tube
- 3110 Tube
- 3336 Gearbox lifting beam
- V.A.G 1306 Drip tray
- V.A.G 1331 Torque wrench

- Gearbox is attached to gearbox support device 3336

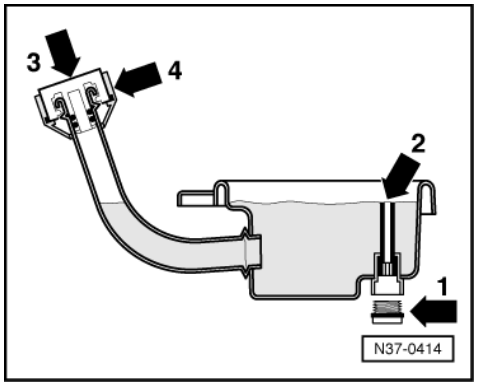

- Place drip tray V.A.G 1306 underneath.
- -> Remove sealing plug -1- and ATF overflow pipe -2-.
- Drain ATF.

3 - Sealing plug
4 - Cap

- Seal ATF cooler connections.
- Take out torque converter.
- Drain torque converter => 20 .

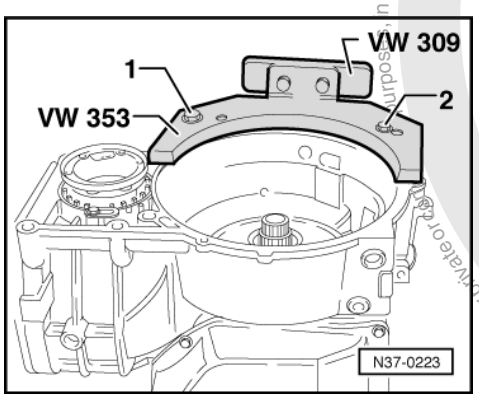

- -> Secure gearbox to assembly support with bolts -1- and -2- (M10).
- Remove gearbox support device 3336.

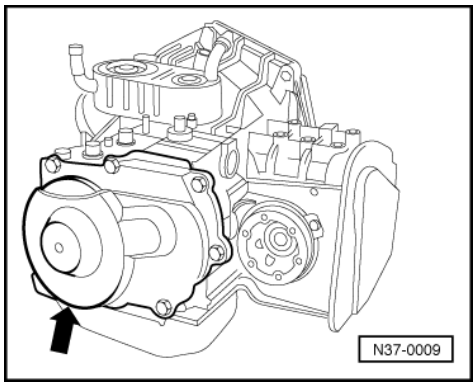

- -> Remove gearbox housing cover with gasket (arrow).

- Remove oil pan.
- If metal shavings are present in remaining ATF, renew torque converter.
- Pull strainer off valve chest => 190 .

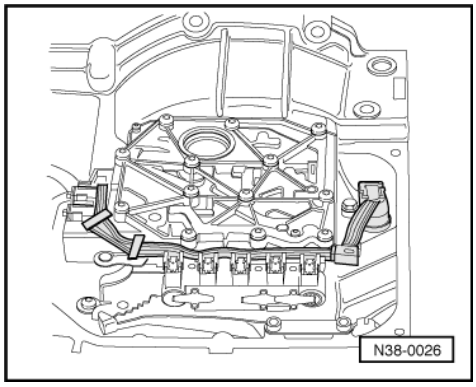

- -> Remove valve chest with conductor strip.

Protected by copyright. Copying for private or commercial purposes, in part or in whole, is not permitted unless authorised by Volkswagen AG. Volkswagen AG does not guarantee or accept any liability with respect to the correctness of information in this document. Copyright by Volkswagen AG.
satelettronica

=>Page 191

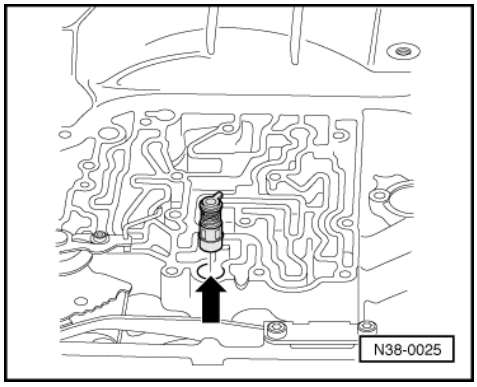

- -> Take out sealing plug -arrow- for -B1-.

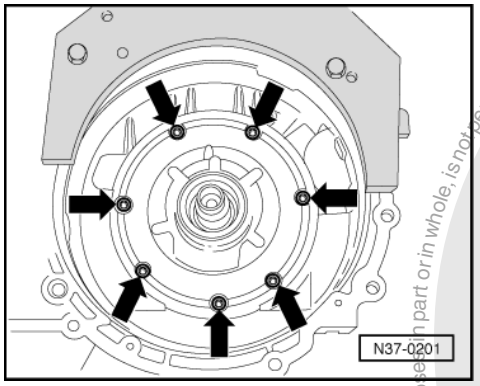

- -> Remove ATF pump bolts (arrows).

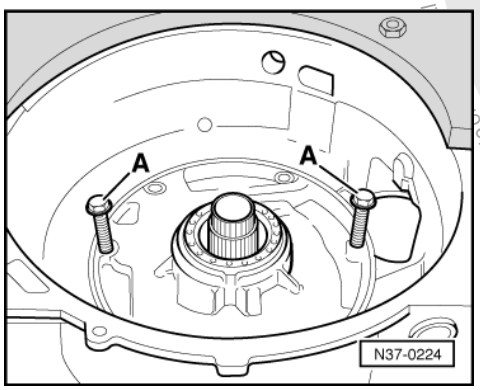

- -> Screw bolts -A- (M8) into the tapped holes of ATF pump.
- Press ATF pump off gearbox by turning the bolts -A- evenly.

Protected by copyright. Copying for private and commercial purposes, in part or in whole, is not permitted unless authorised by Volkswagen AG. Volkswagen AG does not guarantee or accept any liability with respect to the correctness of information in this document. Copyright by Volkswagen AG.
satelettronica

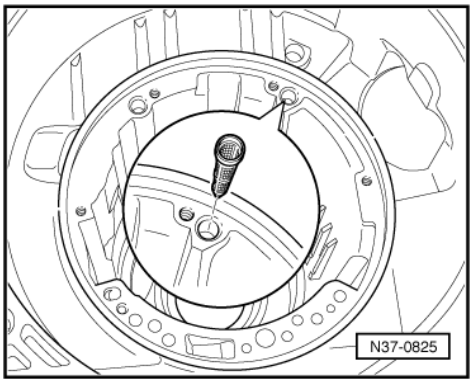

- -> Remove strainer if fitted.

The strainer is fitted in the ATF cooler pipe.

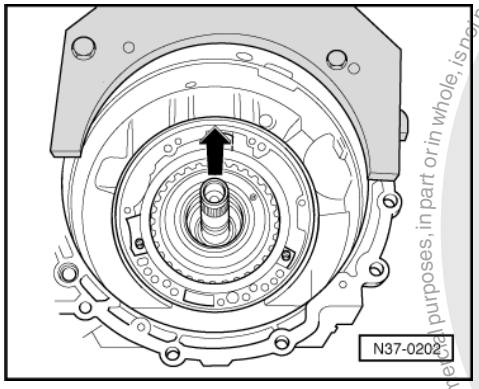

- -> Take out all clutches with supporting tube, -B2- plates, springs and spring caps together.

On some gearboxes the clutches -K1- and -K3- may be pressed together.

Clutch -K1- must only be pressed off -K3- if one of the clutches is to be dismantled or renewed.

Pressing -K1- off -K3- => Page 103 .

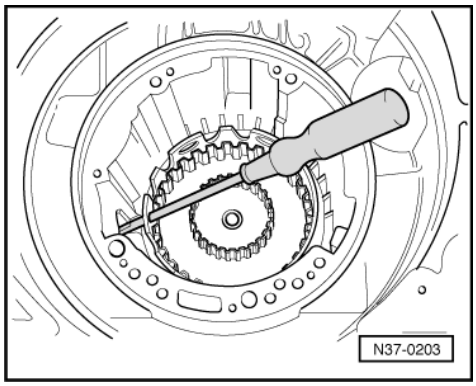

- Engage parking lock.
- -> Insert screwdriver through hole of large sun gear to loosen and tighten bolt for small input shaft.

Protected by copyright. Copying for private or commercial purposes, in part or in whole, is not permitted unless authorised by Volkswagen AG. Volkswagen AG does not guarantee or accept any liability with respect to the correctness of information in this document. Copyright by Volkswagen AG.
satelettronica

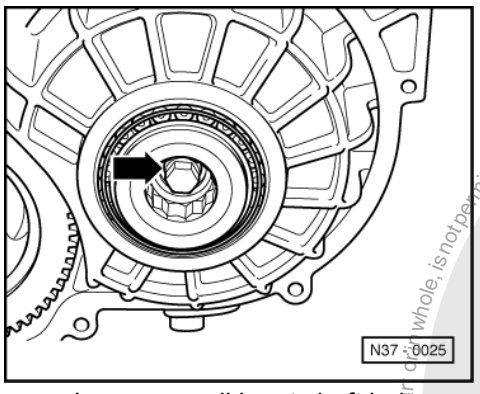

- -> Loosen small input shaft bolt -arrow-.
- Remove small input shaft bolt, washer and shim.
- Remove screw driver and disengage parking lock.

  Planet carrier axial needle bearing remains in gearbox/input gear.

- Pull out small input shaft.

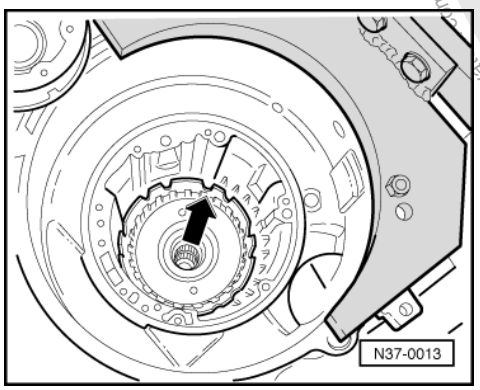

- -> Pull out large input shaft (arrow).

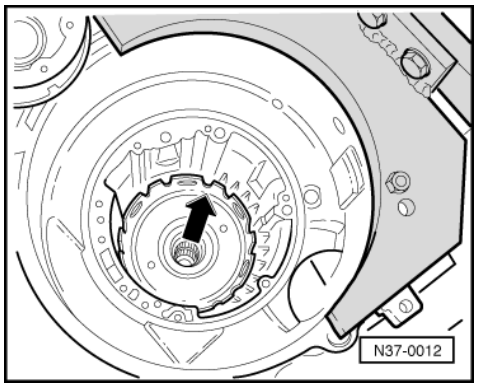

- -> Pull out large sun gear (arrow).

Protected by copyright. Copying for private or commercial purposes, in part or in whole, is not permitted unless authorised by Volkswagen AG. Volkswagen AG does not guarantee or accept any liability with respect to the correctness of information in this document. Copyright by Volkswagen AG.
satelettronica

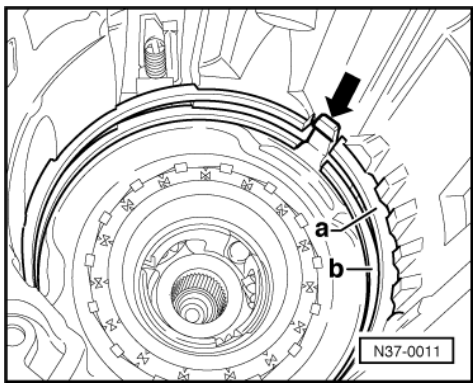

- Remove gearbox speed sender -G38- => Page 209 , Fig. 30 .
- -> Remove supporting tube circlip -a- and freewheel circlip -b-.
- Take freewheel out of gearbox housing by pulling on freewheel retaining wedge -arrow- with pliers.

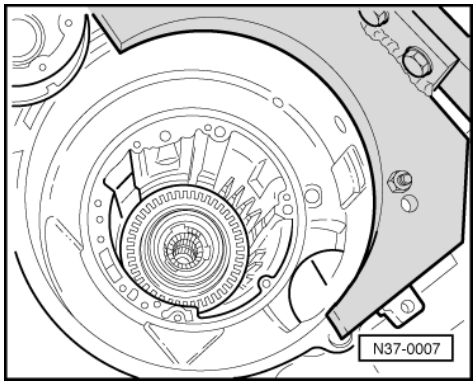

- -> Pull out planet carrier with dished spring.
- Do not dismantle planet carrier further.
- Remove reverse gear brake -B1- plates.

The input gear does not need to be removed in order to dismantle planetary gearbox. Removing and installing input gear => page 224 .

Assemble planetary gearbox => 107 .

Pressing clutch -K1- off -K3-

On some gearboxes the clutches -K1- and -K3- may be pressed together.

Clutch -K1- must only be pressed off -K3- if one of the clutches is to be dismantled or renewed.

If if an exchange component is installed, this is not necessary. The complete clutches will be replaced.

- Ensure the tool press surface is flat and not damaged.

The pin of tube 3110 faces to plate VW 402.

Protected by copyright. Copying for private or commercial purposes, in part or whole, is not permitted unless authorised by Volkswagen AG. Volkswagen AG does not guarantee or accept any liability with respect to the correctness of information in this document. Copyright by Volkswagen AG.
satelettronica

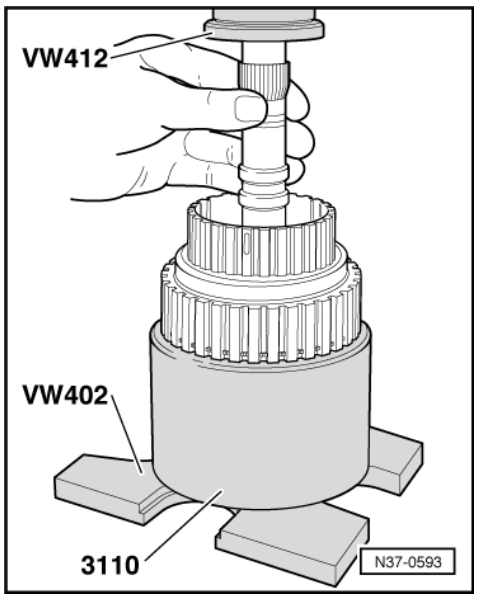

- -> Hold turbine shaft when pressing off.

Pressing clutch -K1- onto -K3-

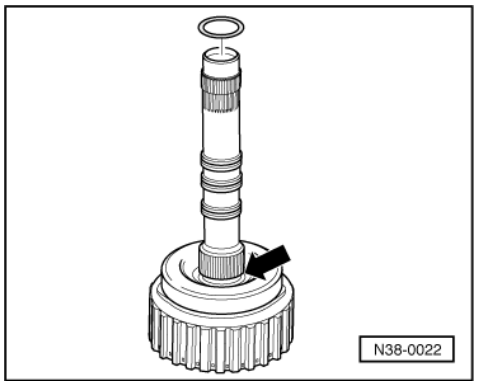

- Moisten O-ring with ATF.
- -> Insert new O-ring in groove in turbine shaft -arrow-.

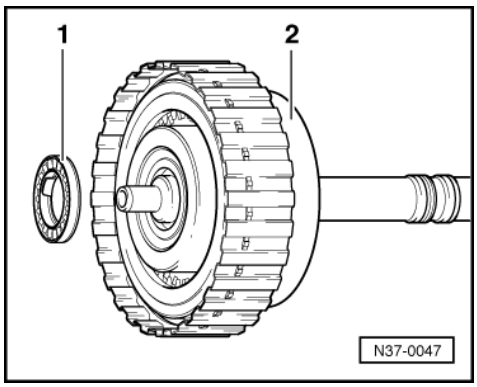

- -> Clip (2) axial needle bearing (1) with washer to 3rd and 4th gear clutch -K3-.

Before pressing as described below, first check whether clutch -K1- can be completely pushed by hand onto splines of turbine shaft of clutch -K3-.

Protected by copyright. Copying for private or commercial purposes, in part or in whole, is not permitted unless authorised by Volkswagen AG. Volkswagen AG does not guarantee or accept any liability with respect to the correctness of information in this document. Copyright by Volkswagen AG.
satelettronica

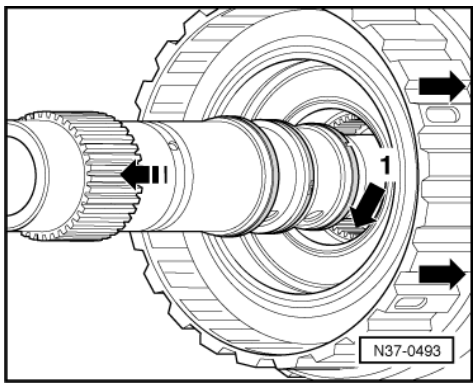

- -> Push clutch -K1- in direction of arrow onto -K3- by hand.
- If it is not possible to push them together and splines -arrow 1- are visible in hub of -K1- , then both clutches must be pressed together first => Page 105 .

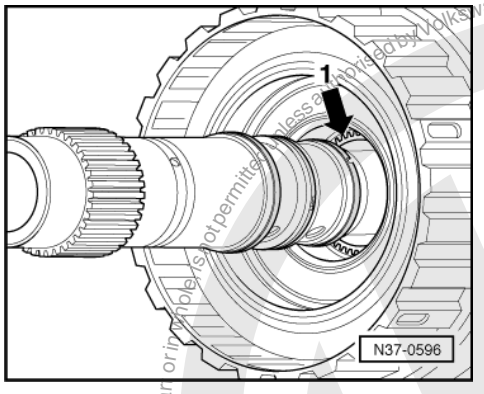

-> If splines of turbine shaft and clutch -K1- slide over each other to stop when pushed together by hand and resistance of O-ring is overcome, then splines -arrow 1- of -K1- are not visible.

In this case the clutches do not need to be pressed together.

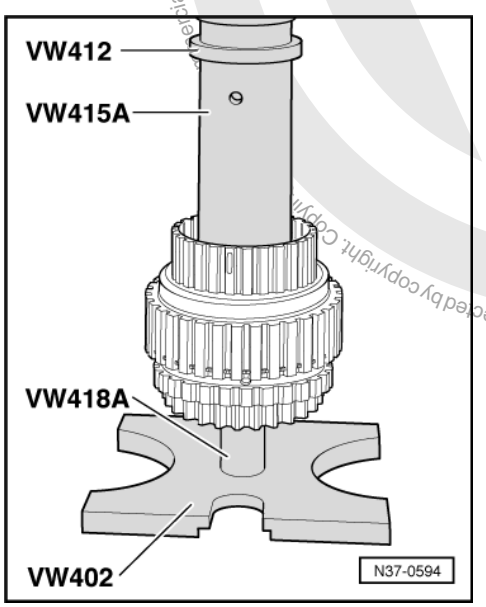

- Ensure the tool press surface is flat and not damaged.
- -> Prepare -K1- and -K3- for pressing as illustrated.

Protected by copyright. Copyright by Volkswagen AG. Volkswagen AG does not guarantee or accept any liability with respect to the correctness of information in this document. Copyright by Volkswagen AG.
satelettronica

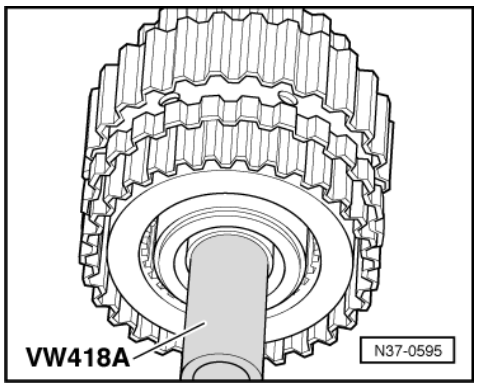

- -> Before pressing on, align VW 418 A centrally onto surface for axial needle bearing (this illustration shows -K3- from below).
- Press clutch -K1- on carefully until stop is perceptible.
- Do not exert further pressure onto clutches !

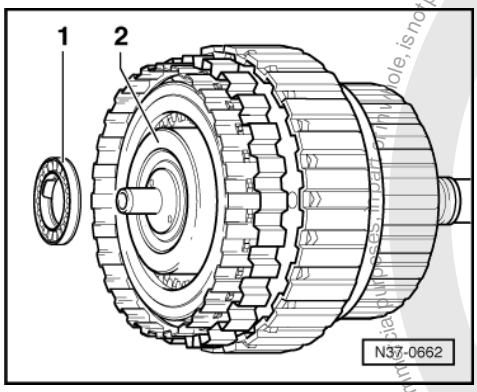

- -> Fit axial needle bearing with washer to 3rd and 4th gear clutch -K3-.

1 - Axial needle bearing with thrust washer

Moisten axial needle bearing washer with ATF so that the bearing, when installing sticks to -K3-. Insert bearing washer on -K3-.

2 - 3rd and 4th gear clutch -K3-

Protected by copyright. Copying for private or commercial purposes, in part or in whole, is not permitted unless authorised by Volkswagen AG. Volkswagen AG does not guarantee or accept any liability with respect to the correctness of information in this document. Copyright by Volkswagen AG.
satelettronica

7.9 - Assembling planetary gearbox

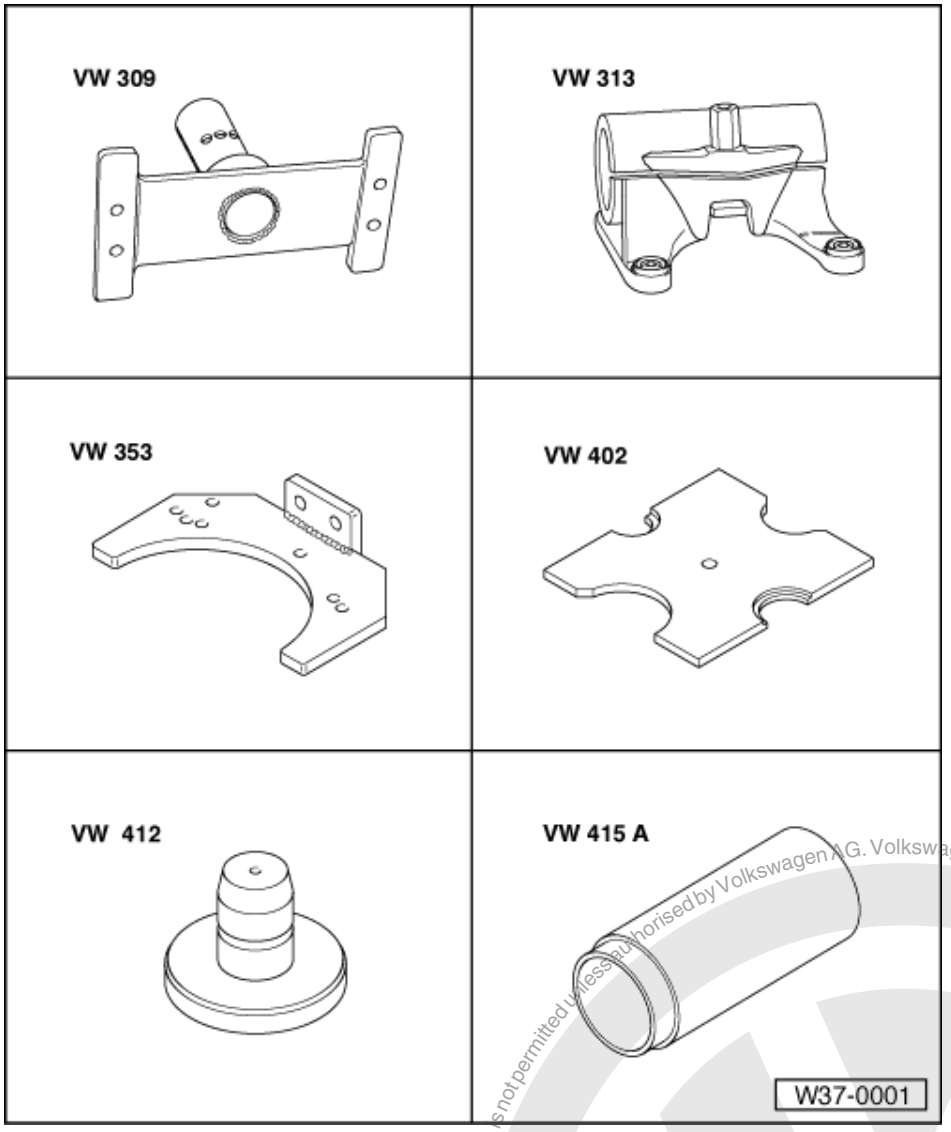

Special tools, workshop equipment, test and measuring appliances and auxiliary items required

- VW 309 Holding plate
- VW 313 Support clamp
- VW 353 Gearbox support
- VW 402 Thrust plate
- VW 412 Press tool
- VW 415 A Tube

satelettronica
Protected by copyright. Copying for private or commercial purposes, in part or in whole, is not permitted unless authorised by Volkswagen AG. Volkswagen AG does not guarantee or accept any liability with respect to the correctness of information in this document. Copyright by Volkswagen AG.

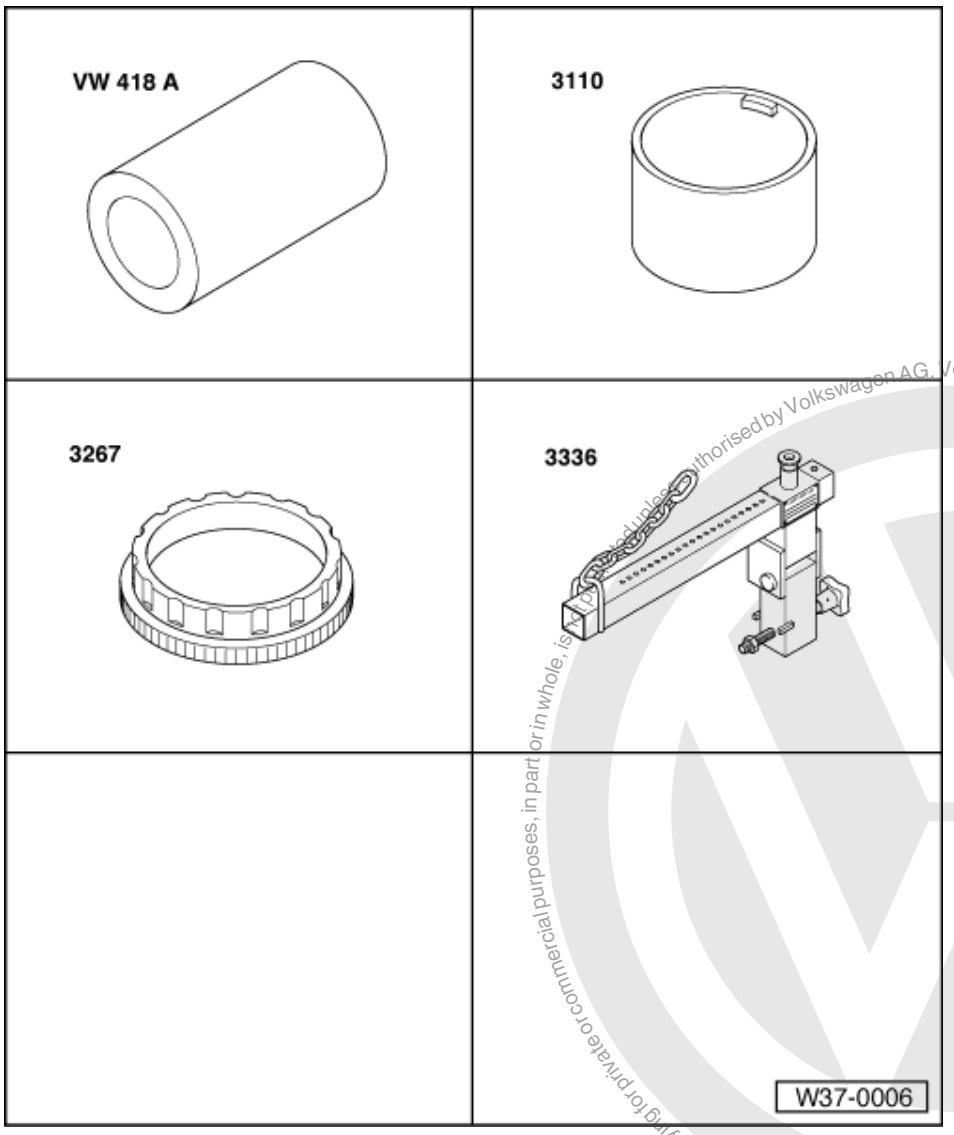

Special tools, workshop equipment, test and measuring appliances and auxiliary items required

- VW 418 A Tube
- 3110 Tube
- 3267 Assembly ring
- 3336 Gearbox lifting beam
- V.A.G 1331 Torque wrench

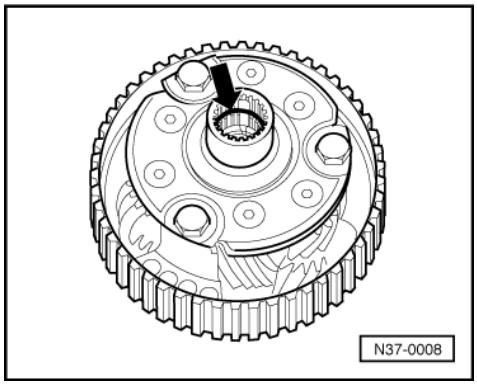

- -> Fit O-ring into planet carrier.

Protected by copyright. Copying for private or commercial purposes, in part or in whole, is not permitted unless authorised by Volkswagen AG. Volkswagen AG does not guarantee or accept any liability with respect to the correctness of information in this document. Copyright by Volkswagen AG.
satelettronica

If planet carrier, large sun gear, large input shaft or small input shaft are renewed, adjust planet carrier => 133 .

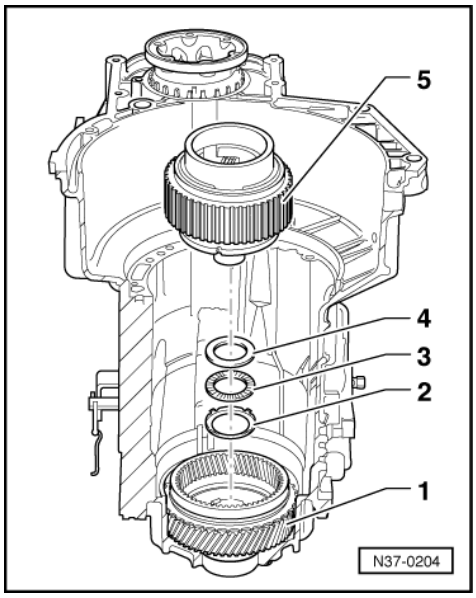

- -> Insert axial needle bearing with washers and planet carrier in the input gear.

1 - Input gear is installed in gearbox housing => Page 82 .

2 - Axial needle bearing washer, insert smooth side into input gear.

3 - Insert axial needle bearing.

4 - Insert axial needle bearing washer.

5 - Install planet carrier with seal fitted.

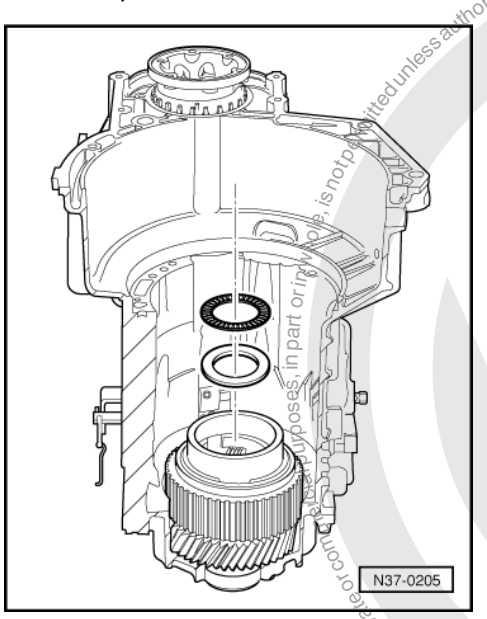

- -> Place washer and axial needle bearing on the small sun gear in the planet carrier.
- Centralize washer and axial needle bearing in small sun gear.

During renewal of

- gearbox housing
- free wheel
- piston for reverse gear brake -B1-

satelettronica
Protected by copyright. Copyright by Volkswagen AG. Volkswagen AG does not guarantee or accept any liability with respect to the correctness of information in this document. Copyright by Volkswagen AG.

◆ or clutch plates

adjust -B1-. Determine shims => 140 .
- Insert shim and inner and outer -B1- plates in correct order => Page 91 .
- Insert pressure plate with flat side facing plates.

Thickness of pressure plate varies according to number of plates. Replacement part is allocated according to gearbox code letters.

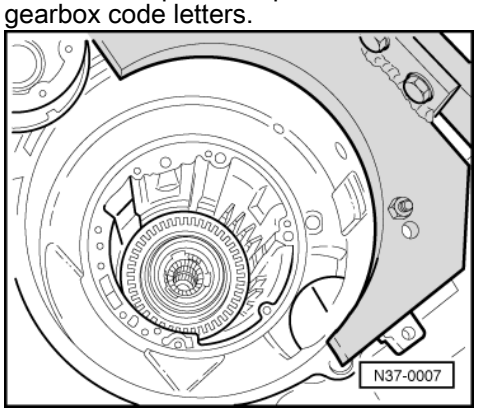

- -> Insert dished washer with convex facing towards freewheel.

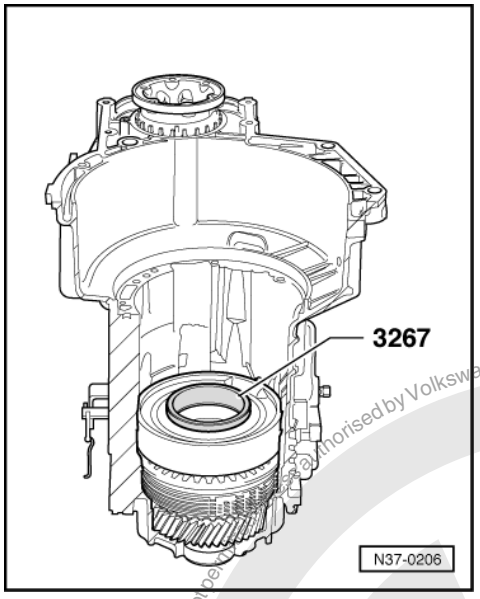

- -> Preload freewheel rollers with assembly ring 3267 and insert free wheel.

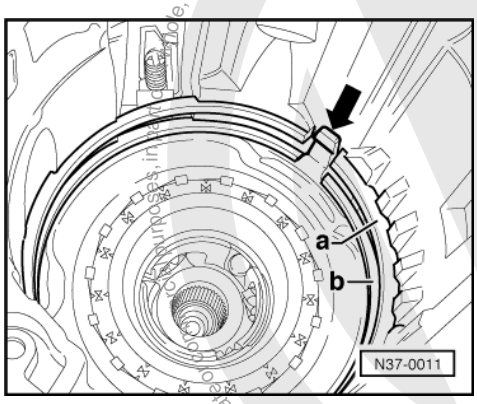

- -> Install circlip for freewheel -b- and circlip for supporting tube -a-.
  - Insert circlip gaps over freewheel retaining wedge (arrow).
  - Install gearbox speed sender -G38- => Page 209 , Fig. 30 .

satelettronica
Protected by copyright. Copyright by Volkswagen AG. Volkswagen AG does not guarantee or accept any liability with respect to the correctness of information in this document. Copyright by Volkswagen AG. Reproduction, in any form or by any means, is only authorised by Volkswagen AG.

- Perform measurement check of -B1-
  => Page 145

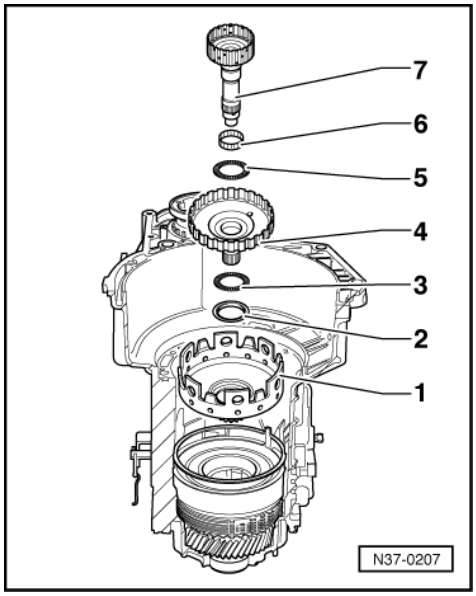

- -> Insert components into gearbox housing starting with the large sun gear down to small input shaft.

1 - Large sun gear

2 - Needle bearing washer

(collar faces to large sun gear)

3 - Axial needle bearing

4 - Large input shaft

5 - Axial needle bearing

6 - Needle bearing

7 - Small input shaft

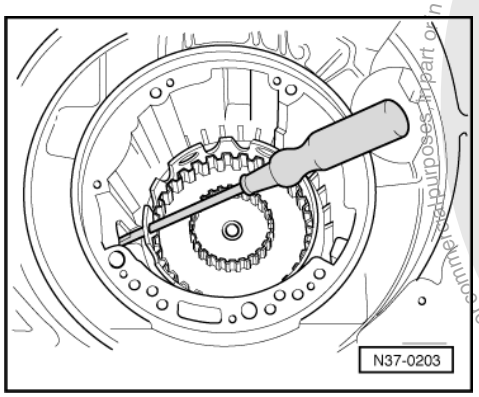

- Engage parking lock.
- -> Insert screwdriver through hole of large sun gear to loosen and tighten bolt for small input shaft.

If planet carrier, large sun gear, large input shaft or small input shaft are renewed, adjust planet carrier => 133 .

Protected by copyright. Copying for private or commercial purposes, in part or in whole, is not permitted unless authorised by Volkswagen AG. Volkswagen AG does not guarantee or accept any liability with respect to the correctness of information in this document. Copyright by Volkswagen AG.
satelettronica

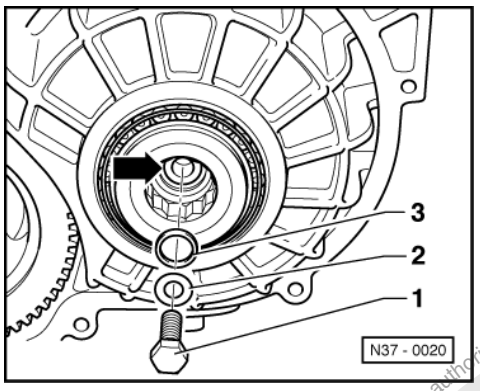

- -> Install small input shaft bolt -1- with washer -2- and shim -3-.

  Tightening torque => 95 , 10 -bolt

- Set shim -3- on collar of small input shaft -arrow-.
- Perform planet carrier check measurement
  => Page 139 .

On some gearboxes the clutches -K1- and -K3- must be pressed together before installing.

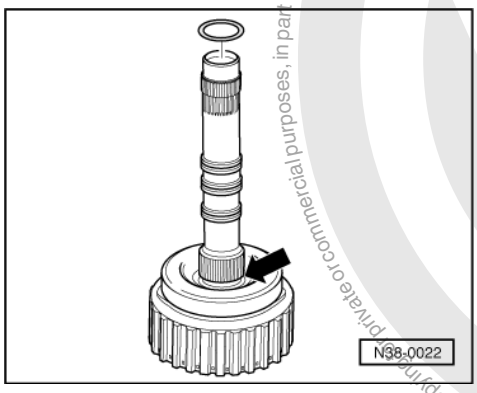

- Moisten O-ring with ATF.
- -> Insert new O-ring in groove in turbine shaft -arrow-.

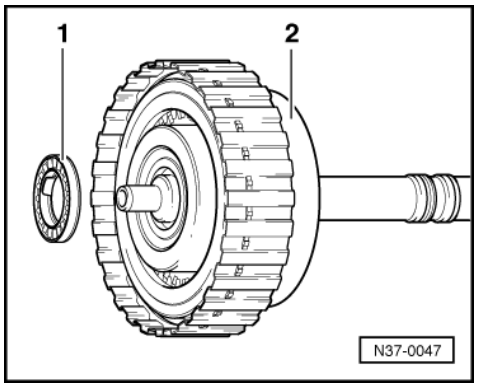

- -> Clip (2) axial needle bearing (1) with washer to 3rd and 4th gear clutch -K3-.

Protected by copyright. Copying for private or commercial purposes, in part or in whole, is not permitted unless authorised by Volkswagen AG. Volkswagen AG does not guarantee or accept any liability with respect to the correctness of information in this document. Copyright by Volkswagen AG.
satelettronica

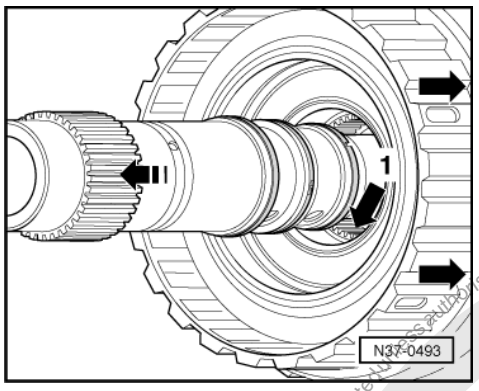

Before pressing as described below, first check whether clutch -K1- can be completely pushed by hand onto splines of turbine shaft of clutch -K3-.

- -> Push clutch -K1- in direction of arrow onto -K3- by hand.
- If splines of turbine shaft and clutch -K1- cannot be pushed together by hand and splines -arrow 1- are visible in hub of -K1-, clutches must be pressed together => page 114 .

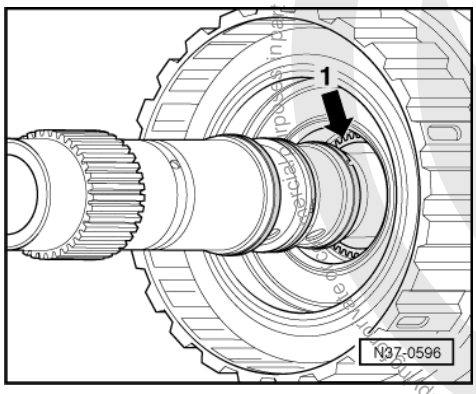

-> If splines of turbine shaft and clutch -K1- slide over each other to stop when pushed together by hand and resistance of O-ring is overcome, then splines -arrow 1- of -K1- are not visible.

In this case the clutches do not need to be pressed together.

- Continue to assemble the gearbox => 114 .

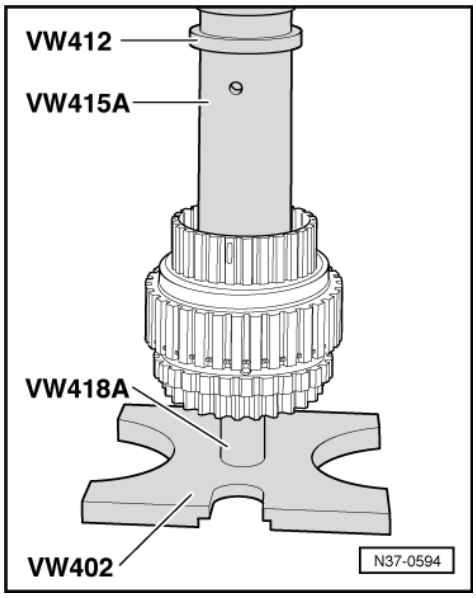

satelettronica

- -> Prepare -K1- and -K3- for pressing as illustrated.
- Ensure the tool press surface is flat and not damaged.

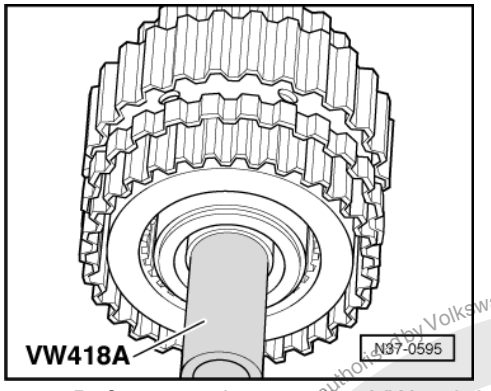

- -> Before pressing on, align VW 418 A centrally onto surface for axial needle bearing (this illustration shows -K3- from below).
- Press clutch -K1- on carefully until stop is perceptible.
- Do not exert further pressure onto clutches !

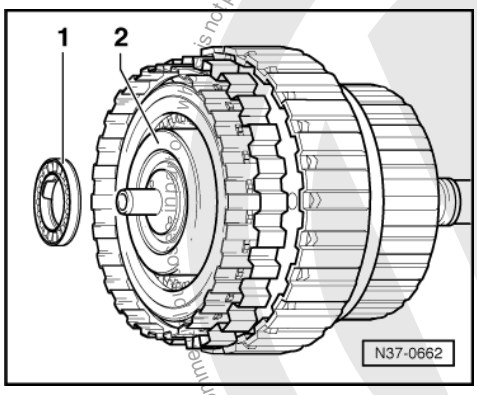

Further assembly of planetary gearbox

- -> Fit axial needle bearing with washer to 3rd and 4th gear clutch -K3-.

1 - Axial needle bearing with thrust washer

Moisten axial needle bearing washer with ATF so that the bearing, when installing sticks to -K3-. Insert bearing washer on -K3-.

2 - 3rd and 4th gear clutch -K3-

Protected by copyright. Copying for private or commercial purposes is not permitted unless authorised by Volkswagen AG. Volkswagen AG does not guarantee or accept any liability with respect to the correctness of information in this document. Copyright by Volkswagen AG.
satelettronica

Copyright by Volkswagen AG. Volkswagen AG does not guarantee or accept any liability with respect to the correctness of information in this document. Copying for private or commercial purposes, in part or in whole, is not permitted unless authorised by Volkswagen AG.

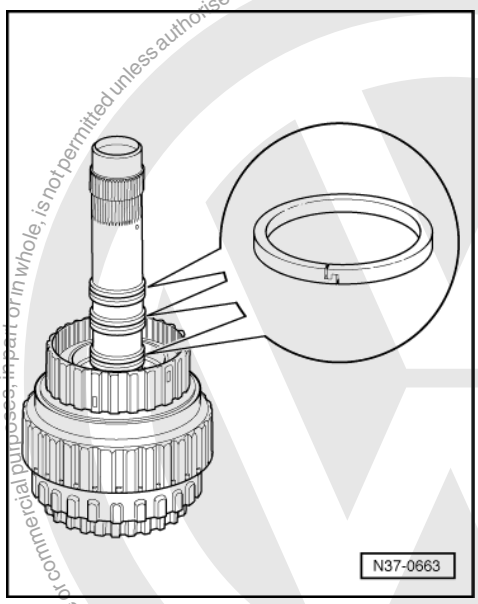

- -> Ensure piston rings seat correctly on -K3-.
- Ensure that the ends of the piston rings are hooked together.

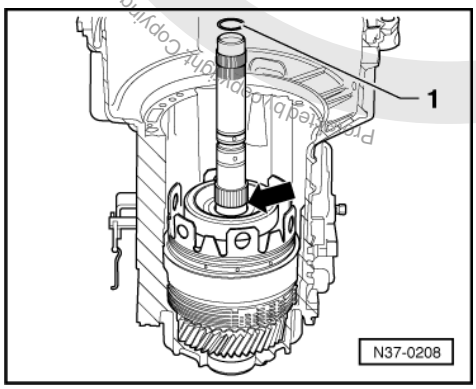

Clutches which are not pressed:

- -> Inserting 3rd and 4th gear clutch -K3- with axial needle bearing and washer.

• O-ring -1- is inserted in groove -arrow- and moistened with ATF.

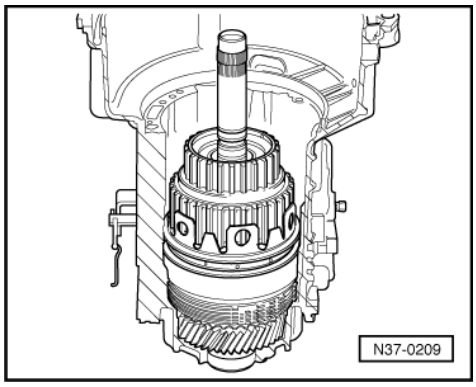

- -> Inserting 1st to 3rd gear clutch -K1-.

satelettronica

Pressed clutches:

If -K1- and -K3- are pressed together, both clutches can only be inserted together.

- Insert 1st to 3rd gear clutches -K1- with 3rd and 4th gear clutch -K3-.

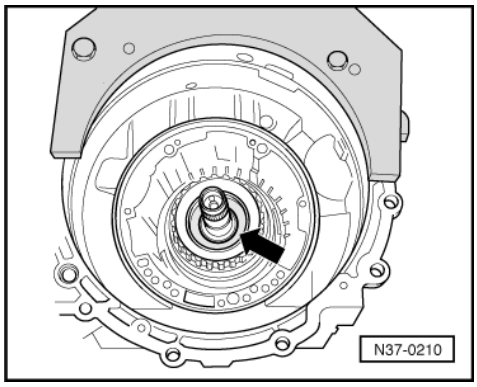

- If -K1-, -K2-, the small input shaft or the ATF pump is renewed, the shim must be redetermined => Adjusting clutch play between -K1- and -K2- , 146 .

Up to three shims may be installed.

- -> Insert shims -arrow- in -K1-.

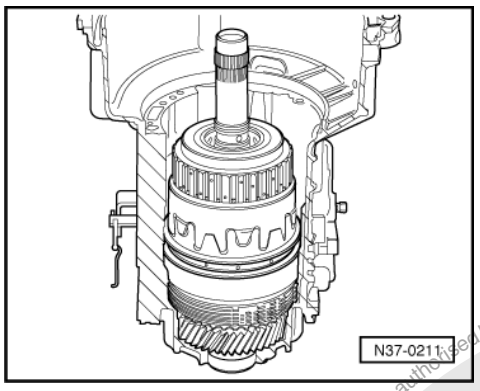

- -> Insert reverse gear clutch -K2-.
- Insert supporting tube for -B2- plate set (arrow) so that supporting tube groove engages in freewheel wedge.

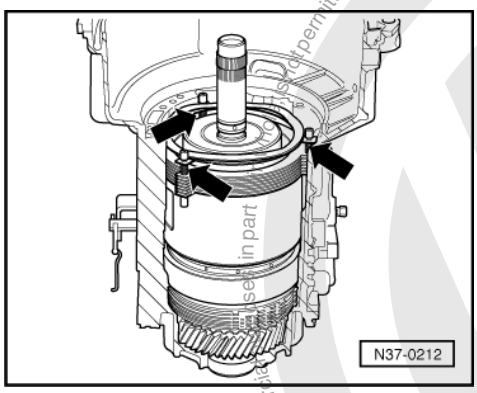

- -> Only for gearbox CKY, install -B2- plates as follows:
  - First insert a 3 mm thick outer plate
  - Insert three spring caps in outer plate
  - Insert compression springs (arrows).
  - Insert all but the last outer plate

satelettronica
Protected by copyright. Copying for private or commercial purposes, in part or in whole, is not permitted unless authorised by Volkswagen AG. Volkswagen AG does not guarantee or accept any liability with respect to the correctness of information in this document. Copyright by Volkswagen AG.

- Insert three spring caps onto compression springs.

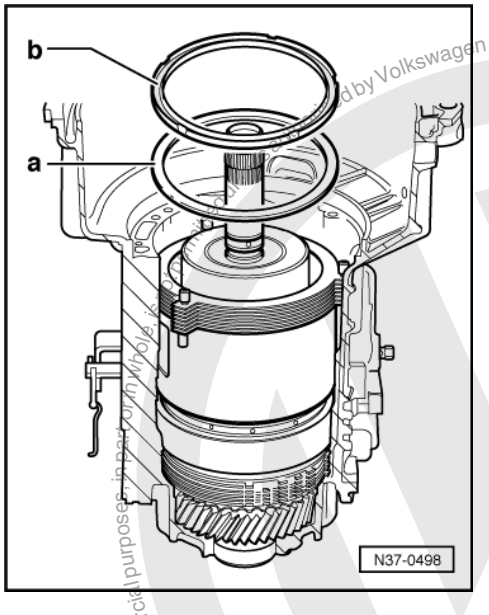

Only on gearbox CKY with installed corrugated washer is the brake play -B2- determined by the thickness of the last outer plate. Determining thickness of plate is described on => page 159

- Insert last -measured- outer plate.
- Install corrugated washer

-> On all other gearboxes (with retaining ring -b-) the last outer plate is always 3 mm thick. The play of brake -B2- is determined by a shim -a-, on which the retaining ring -b- seats. A corrugated spring washer is not present.

- Insert last outer plate -3 mm thick-.

Determine shim => Page 152 .

- Install shim.
- Insert retaining ring -b- onto shim. Smooth side facing shim.

During renewal of

- gearbox housing
- the supporting tube
- the ATF pump
- the corrugated washer
- the retaining ring
- or clutch plates

must the 2nd and 4th gear brake -B2- must be adjusted => from 152 .

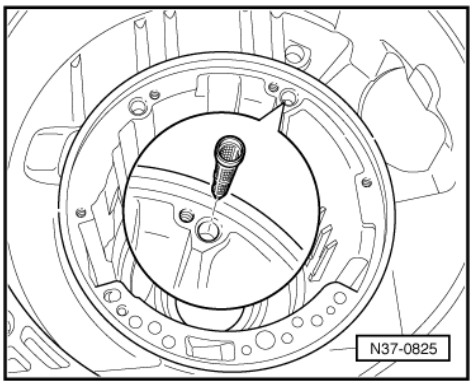

Protected by copyright. Copyright by Volkswagen AG. Volkswagen AG does not guarantee or accept any liability with respect to the correctness of information in this document. Copyright by Volkswagen AG.
satelettronica

As replacement parts, these components must be allocated according to gearbox code.

If fitted:

- Clean strainer.
- -> Install strainer.

Strainer is located in ATF cooler pipe.

- Install new seal for ATF pump.
- Lightly moisten O-ring with ATF and set on ATF pump.

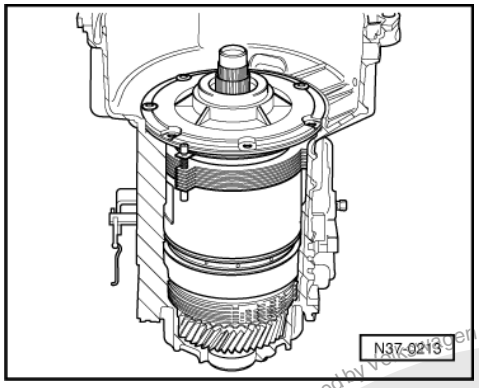

- -> Insert ATF pump and press in by hand to stop.

Ensure that O-ring is not damaged during insertion of pump.

- Tighten bolts evenly, crosswise.

Tightening torque => 83 , 1 -bolt

- Carry out check measurement of clutch play => Page 151 .

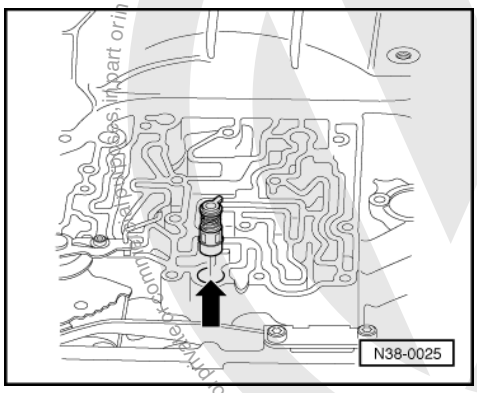

- -> Insert sealing plugs with new O-rings -arrow-.

  Installation position: Lug engages in oil channel.

- Install valve chest with conductor strip and new O-ring => from page 191 .

Ensure that manual selector valve does not fall out.

- Install new steel spring with bolt => from 191 .
- Install oil pan with seal and spacer bushes =>from 188 .

Protected by copyright. Copyright by Volkswagen AG. Volkswagen AG does not guarantee or accept any liability with respect to the correctness of information in this document. Copyright by Volkswagen AG. Reproduction, in part or in whole, is not permitted unless authorised by Volkswagen AG.
satelettronica

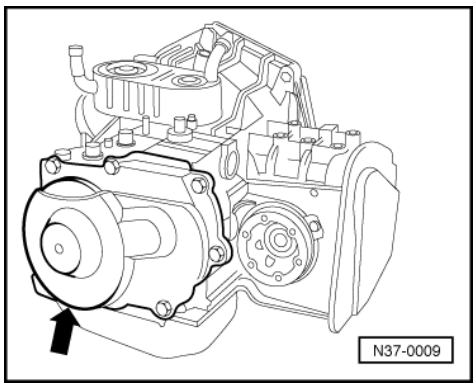

- -> Install cover -arrow- with new seal and spacer bushes.

  Tightening torque => 96 , 14 -bolt

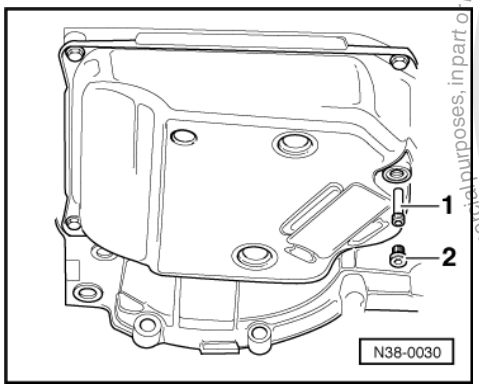

- -> Fit and tighten bolts for overflow pipe -1- => 192 , 2 -overflow pipe.
- After repairs, fit new seal to plug -2- and screw in hand-tight.

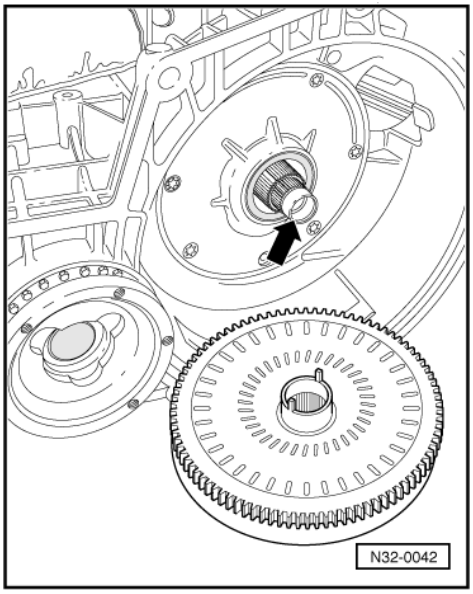

- -> Check now whether a sleeve bearing is present in turbine shaft => 3 .
- Before you now insert torque converter check whether torque converter has the proper code. Checking torque converter code => from 16 .
- Install torque converter => Page 16 .
- Install gearbox => Page 55 .
- Fill with 3 litres of ATF => Page 72 .
- Check gear oil level in final drive => page 214 .

Protected by copyright. Copying for private or commercial purposes, in part or in whole, is not permitted unless authorised by Volkswagen AG. Volkswagen AG does not guarantee or accept any liability with respect to the correctness of information in this document. Copyright by Volkswagen AG.
satelettronica

7.10 - Installing exchange components

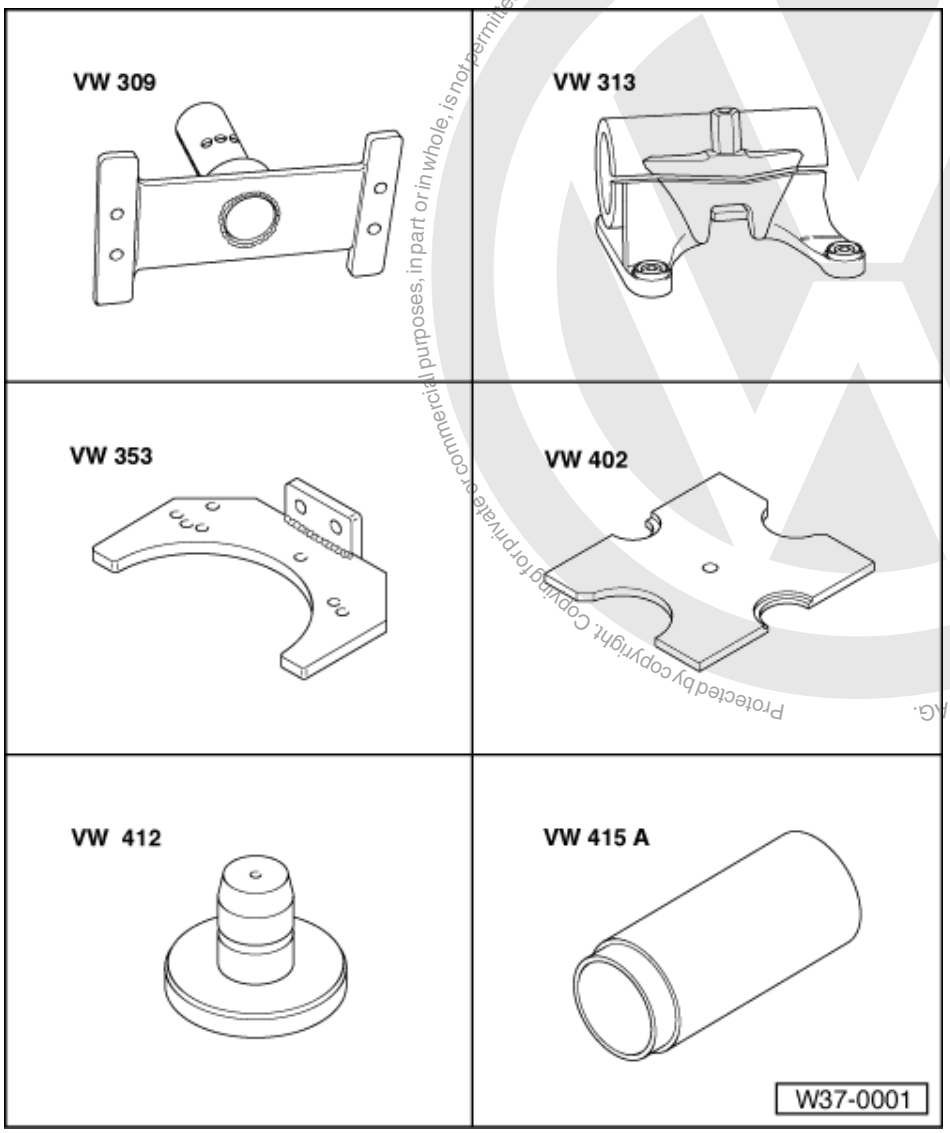

Protected by copyright. Copying for private or commercial purposes, in part or in whole, is not permitted unless authorised by Volkswagen AG. Volkswagen AG does not guarantee or accept any liability with respect to the correctness of information in this document. Copyright by Volkswagen AG.

satelettronica

Special tools, workshop equipment, test and measuring appliances and auxiliary items required

- VW 309 Holding plate
- VW 313 Support clamp
- VW 353 Gearbox support
- VW 402 Thrust plate
- VW 412 Press tool
- VW 415 A Tube

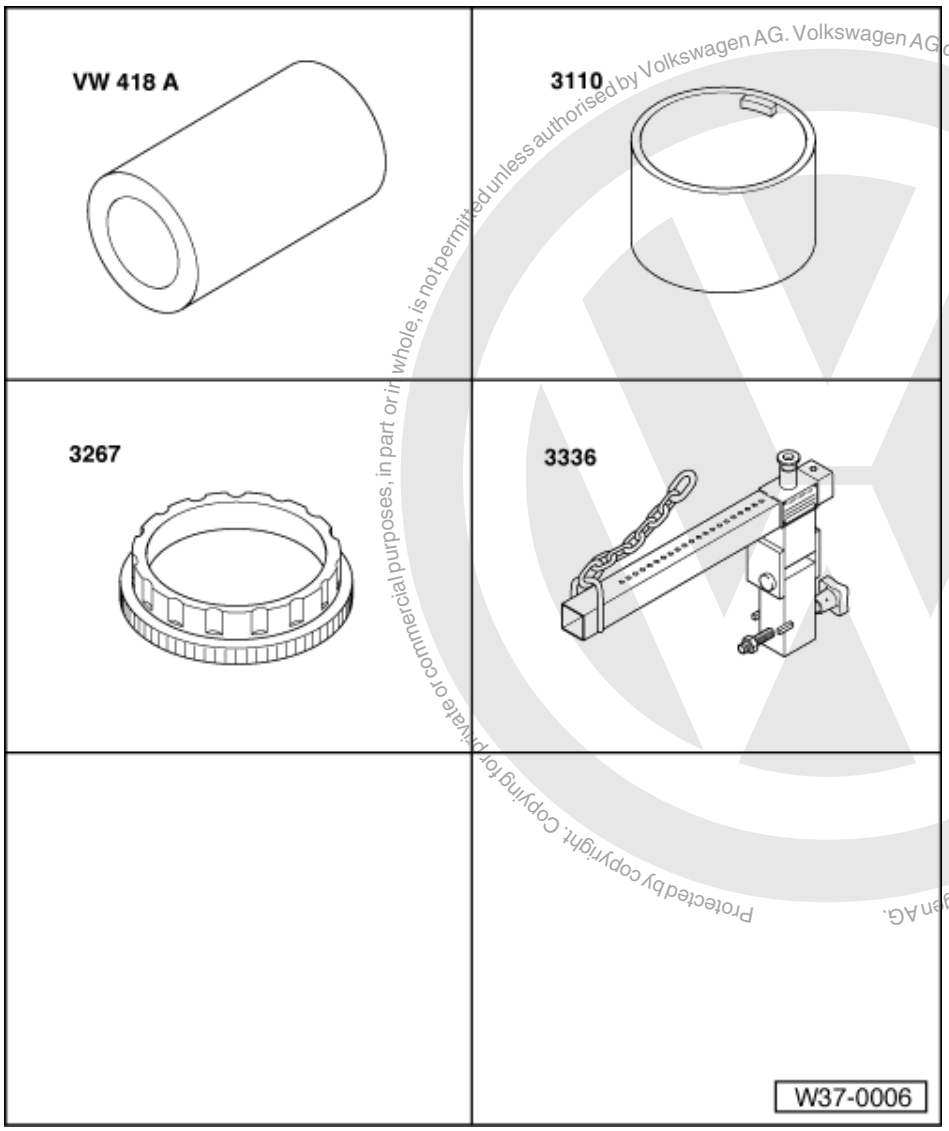

Protected by copyright. Copying for private or commercial purposes, in part or in whole, is not permitted unless authorised by Volkswagen AG. Volkswagen AG does not guarantee or accept any liability with respect to the correctness of information in this document. Copyright by Volkswagen AG.

satelettronica

Special tools, workshop equipment, test and measuring appliances and auxiliary items required

- VW 418 A Tube
- 3110 Tube
- 3267 Assembly ring
- 3336 Gearbox lifting beam
- V.A.G 1331 Torque wrench

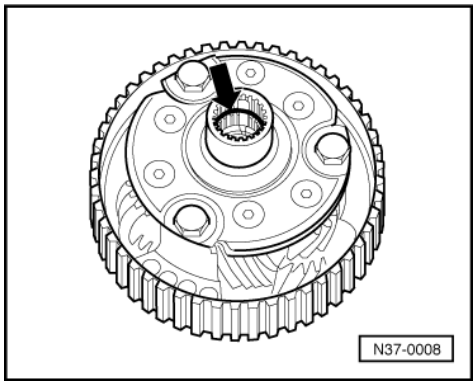

All parts of the exchange component are exchange parts. They are to be cleaned and packed after being exchanged. Return all the parts undamaged to the manufacturer.

- -> Fit new O-ring (from exchange component) into planet carrier.

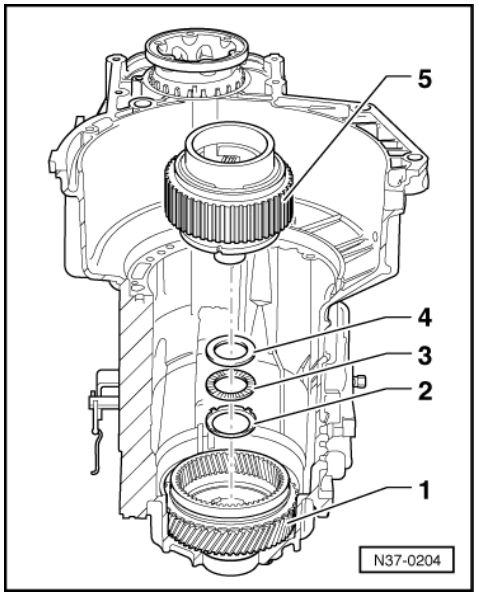

- -> Insert axial needle bearing with washers (both from exchange component) and planet carrier in the input gear.

1 - Input gear is installed in gearbox housing => Page 82 .

2 - New axial needle bearing washer, insert smooth side into input gear.

3 - Insert new axial needle bearing.

4 - Insert new axial needle bearing washer.

5 - Install planet carrier with seal fitted.

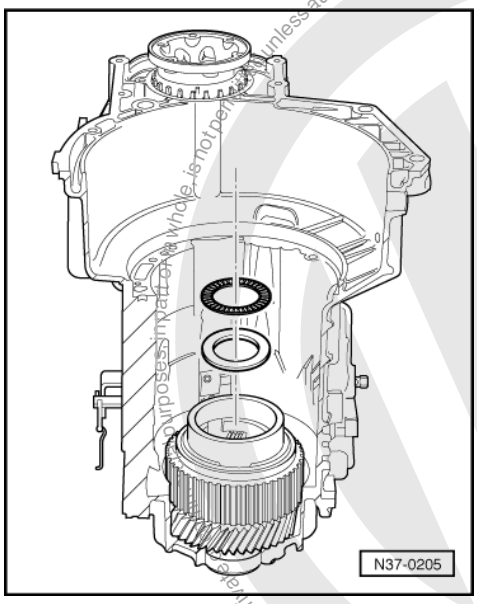

- -> Place new washer and new axial needle bearing (both from exchange component) on the small sun gear in the planet carrier.
- Centralize washer and axial needle bearing in small sun gear.
- Insert shim provided in exchange component as well as inner and outer plates of brake -B1- (sequence => 91).

Protected by copyright. Copyright by Volkswagen AG.
Volkswagen AG does not guarantee or accept any liability with respect to the correctness of information in this document. Copyright by Volkswagen AG.
satelettronica

- Insert pressure plate with flat side facing plates.

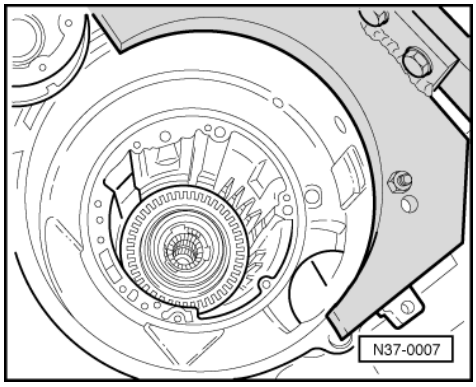

- -> Insert dished washer (from exchange component) with convex side facing towards freewheel.

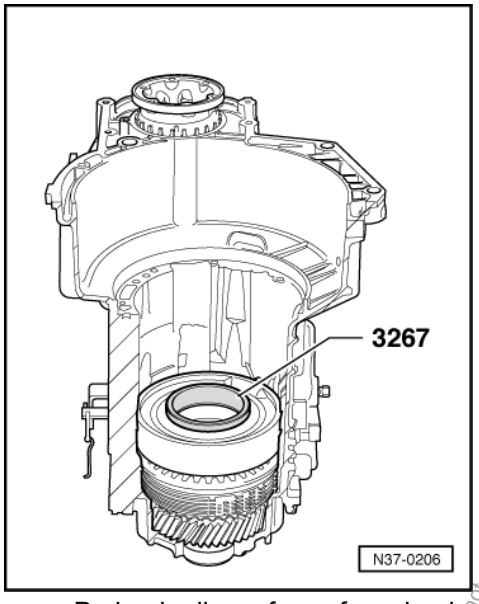

- -> Preload rollers of new freewheel with assembly ring 3267 and insert free wheel.

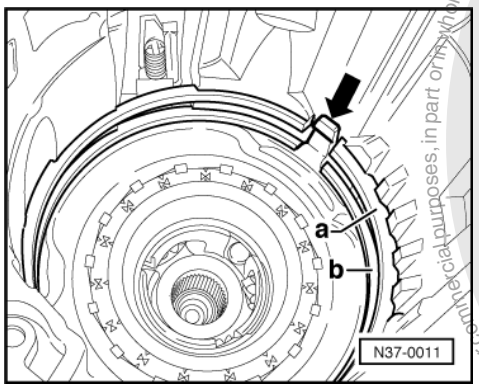

- -> Installation position of free wheel: The retaining wedge (arrow) must be seated in the machined groove on gearbox housing.
- Install freewheel circlip -b- and supporting tube circlip -a- (both from exchange component).
  - Insert circlip gaps over freewheel retaining wedge (arrow).

  - Install gearbox speed sender -G38- => Page 209 , Fig. 30 .

  Perform measurement check of -B1-
  => Page 145

satelettronica
Protected by copyright. Copyright by Volkswagen AG.
Copyright by Volkswagen AG. Volkswagen AG does not guarantee or accept any liability with respect to the correctness of information in this document. Copyright by Volkswagen AG. Not permitted unless authorised by Volkswagen AG. Volkswagen AG does not guarantee or accept any liability with respect to the correctness of information in this document. Copyright by Volkswagen AG.

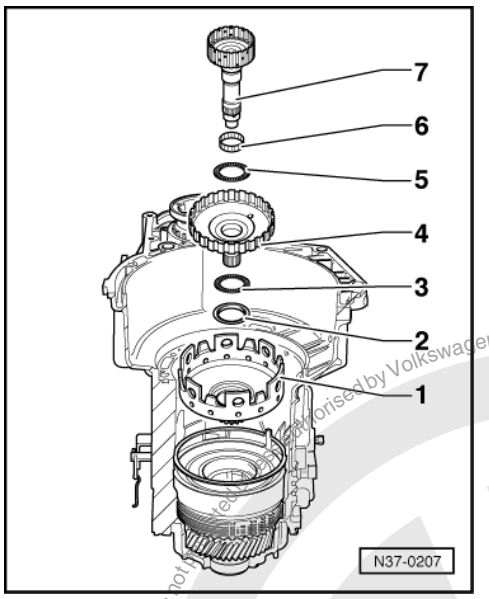

- -> Insert components into gearbox housing starting with the large sun gear down to small input shaft.

1 - Large sun gear
2 - New axial needle bearing washer (from exchange component)
(collar faces to large sun gear)

3 - New axial needle bearing (from exchange component)
4 - Large input shaft
5 - New axial needle bearing (from exchange component)
6 - New needle bearing (from exchange component)
7 - Small input shaft
- Engage parking lock.

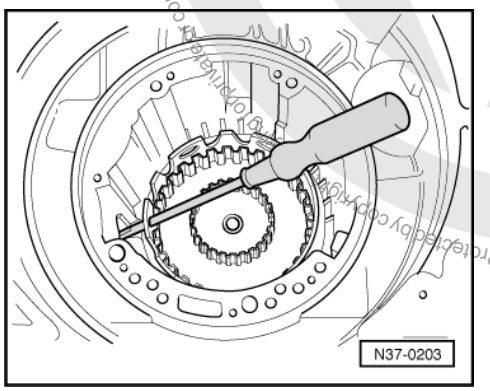

- -> Insert screwdriver through hole of large sun gear to loosen and tighten bolt for small input shaft.

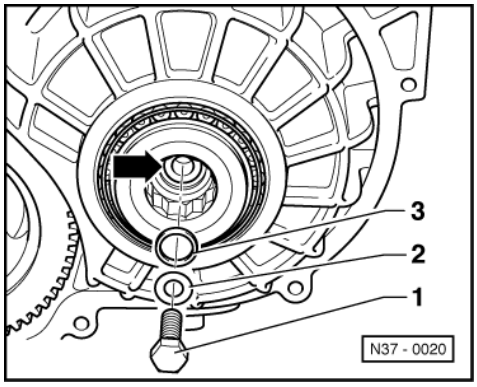

Protected by copyright. Copyright by Volkswagen AG.
Information provided on this page is not to be used or disclosed to other parties without authorised by Volkswagen AG. Volkswagen AG does not guarantee or accept any liability with respect to the correctness of information in this document.
satelettronica

Reproduced by Volkswagen AG. Volkswagen AG does not guarantee or accept any liability with respect to the correctness of information in this document. Copyright by Volkswagen AG. Reproduced for private or commercial purposes, in part or in whole, is not permitted unless authorised by Volkswagen AG. Copyright by Volkswagen AG.

- -> Install small input shaft bolt -1- with washer -2- and shim -3-.

  Tightening torque => 95 , 10 -bolt

- Perform planet carrier check measurement
  => Page 139 .

Clutches -K1- and -K3- may be pressed together in the exchange component. If so, they must be installed together.

Clutches -K1- and -K3- may be loosely set together in some gearboxes.

Clutches which are not pressed:

- Moisten new O-ring from exchange component with ATF.

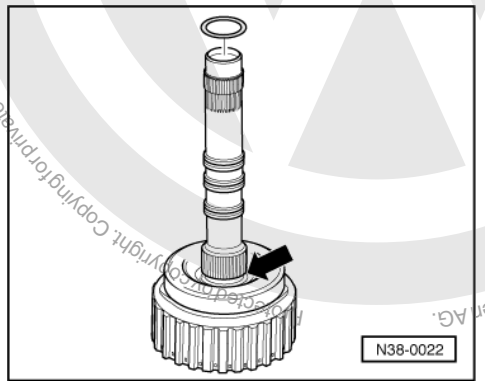

- -> Insert new O-ring in groove in turbine shaft -arrow-.

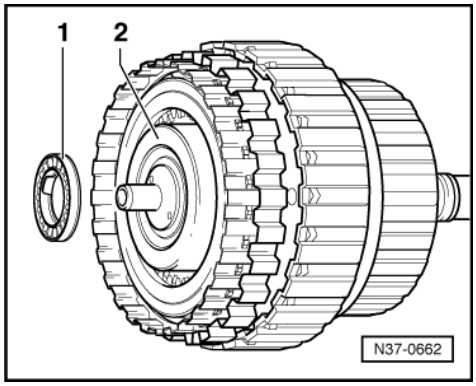

Further installation of exchange component

- -> Fit new axial needle bearing with washer (both from exchange component) to 3rd and 4th gear clutch -K3-.

(Figure shows pressed -K1- and -K3- clutches. The procedure is the same for clutches which are not pressed together.)

1 - Axial needle bearing with thrust washer

  Moisten axial needle bearing washer with ATF so that the bearing, when installing sticks to -K3-. Insert bearing washer on -K3-.

satelettronica

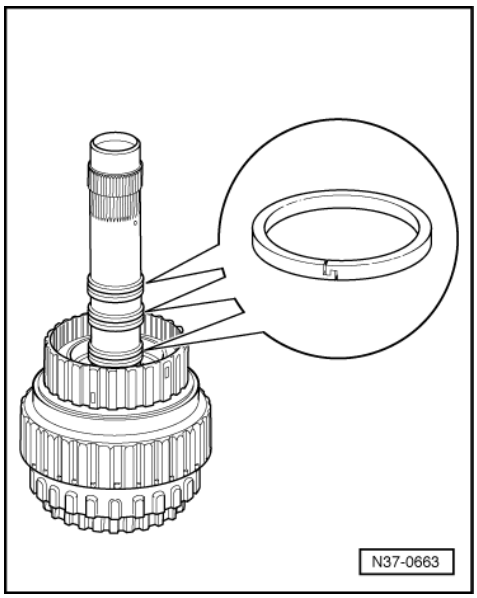

2 - 3rd and 4th gear clutch -K3-

- -> Ensure piston rings seat correctly on -K3-.
- Ensure that the ends of the piston rings are hooked together.

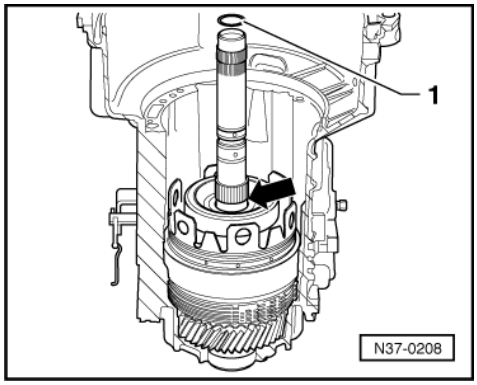

Clutches which are not pressed:

- -> Inserting 3rd and 4th gear clutch -K3- with axial needle bearing and washer.

• O-ring -1- is inserted in groove -arrow- and moistened with ATF.

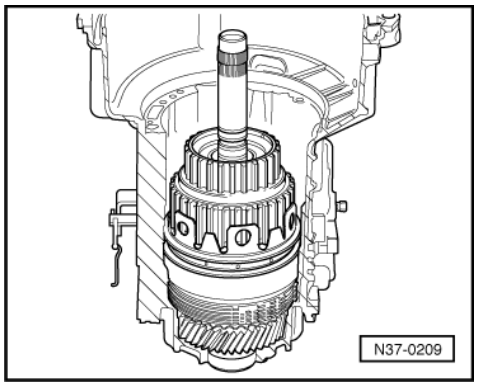

- -> Inserting 1st to 3rd gear clutch -K1-.

Protected by copyright. Copying for private or commercial purposes, in part or in whole, is not permitted unless authorised by Volkswagen AG. Volkswagen AG does not guarantee or accept any liability with respect to the correctness of information in this document. Copyright by Volkswagen AG.
satelettronica

Pressed clutches:

If -K1- and -K3- are pressed together, both clutches can only be inserted together.

- Insert 1st to 3rd gear clutches -K1- with 3rd and 4th gear clutch -K3-.

When an exchange component is installed, the play between the already installed clutches -K1/K3- and the new reverse gear clutch -K2- (from the exchange component) must be adjusted.

Play is necessary and must be adjusted.

To this end, coloured plastic shims are included with the exchange component. Each shim has a different thickness.

How to determine play and which shims must be inserted is described on => 146 .

To perform the adjustment, use the new clutches -K1/K3- and -K2- from the exchange component.

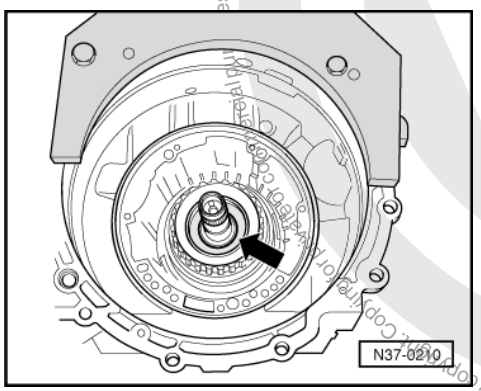

- -> Insert determined shims -arrow- in -K1-.

Up to three shims may be installed.

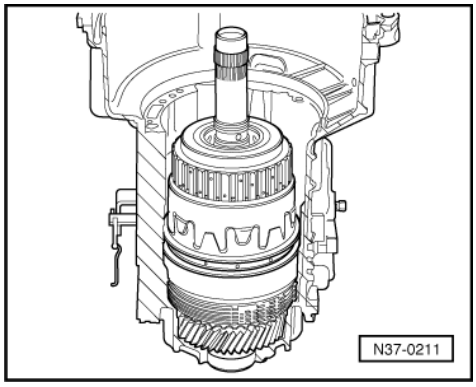

- -> Insert new reverse gear clutch -K2- (from exchange component).
- Insert new supporting tube (from exchange component) for -B2- clutch plate set so that groove in supporting tube engages in freewheel wedge.

Before installation is continued:

There are two versions of brake -B2-.

Protected by copyright. Copyright by Volkswagen AG. Volkswagen AG does not guarantee or accept any liability with respect to the correctness of information in this document. Copyright by Volkswagen AG.
satelettronica

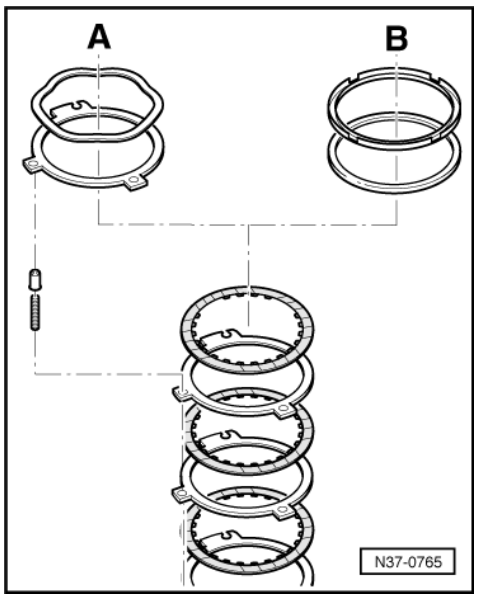

-> Brake with corrugated washer -A-

In this brake, the last outer plate serves simultaneously as shim. This outer plate comes in various thicknesses.

Brake with retaining ring -B-

In this version, a shim is laid beneath the retaining ring.

Installing brake -B2- with corrugated washer

The thickness of the last outer plate determines play of brake -B2- only in gearboxes with corrugated washer installed.

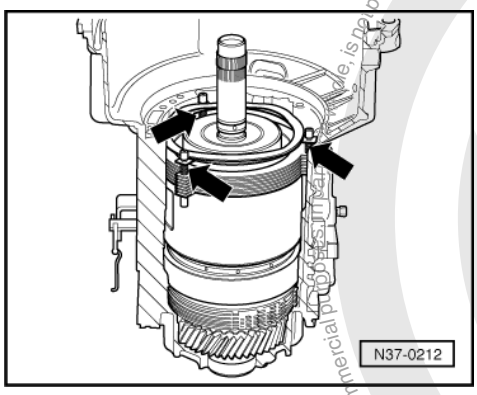

- -> Install new -B2- plates (from exchange component) as follows:
  - First insert a new 3 mm thick outer plate.
  - Insert three new spring caps in outer plate.
  - Insert new compression springs (arrows).
  - Insert all but the last outer plate
  - Insert three spring caps onto compression springs.
- Insert last -measured- outer plate (from exchange component).
- Install new corrugated washer.

Further assembly of planetary gearbox => 129 .

Protected by copyright. Copying for private or commercial purposes, in any form or medium, is not permitted unless authorised by Volkswagen AG. Volkswagen AG does not guarantee or accept any liability with respect to the correctness of information in this document. Copyright by Volkswagen AG.
satelettronica

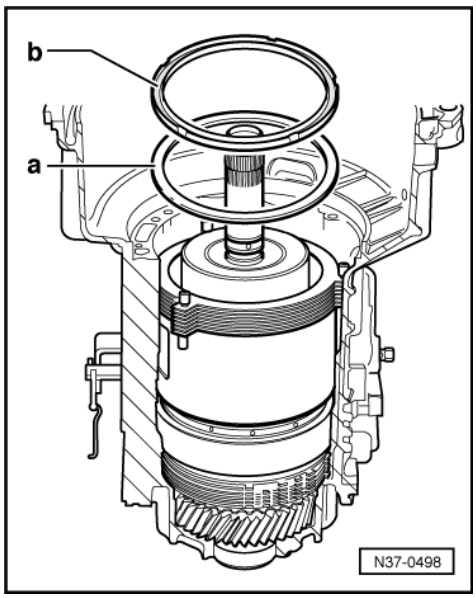

Installing brake -B2- with retaining ring

-> On all gearboxes with retaining ring -b-, the last outer plate is always 3 mm thick. The play of brake -B2- is determined by a shim -a-, on which the retaining ring -b- is set. A corrugated washer is not present.

Install new -B2- clutch plates (from exchange component) as follows:

- Insert last outer plate -3 mm thick-.
- Install new -measured- shim (from exchange component).
- Set new retaining ring -b- onto shim, smooth side facing shim.

Further installation of exchange component

If fitted:

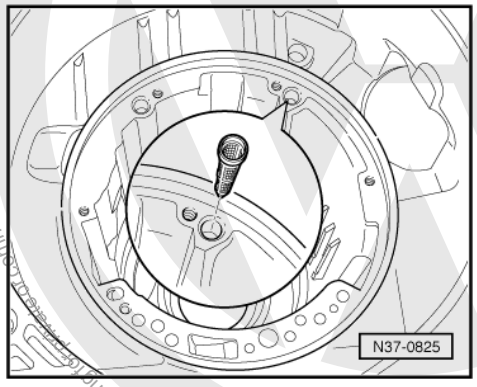

- Clean strainer.
- -> Install strainer.

Strainer is located in ATF cooler pipe.

- Install new ATF pump seal (from exchange component).

satelettronica

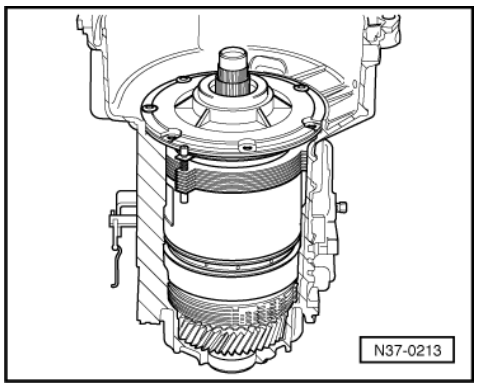

- Fit new O-ring (from exchange component) on ATF pump.
- -> Install ATF pump (from exchange component).

Ensure that the O-ring is not damaged during pump installation.

- Tighten bolts evenly, crosswise.

Tightening torque 83 , 1 -bolt

- Carry out check measurement of clutch play => Page 151 .

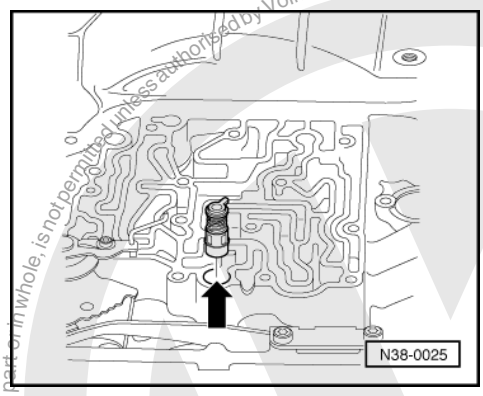

- -> Insert sealing plugs -arrow- with O-rings (from exchange component).

  Installation position: Lug engages in oil channel.

  Install valve chest with conductor strip and new O-ring for wire port (both from exchange component) => from 191 .

Ensure that manual selector valve does not fall out.

- Install new steel spring with bolt and new operating rod (both from exchange component) => from 191 .
- Install new strainer with seal (both from exchange component).

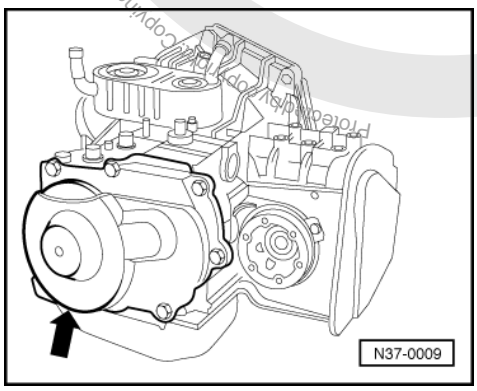

Copyright by Volkswagen AG. Protected by copyright. Copying for commercial purposes, in part or in whole, is not permitted unless authorized by Volkswagen AG. Volkswagen AG does not guarantee or accept any liability with respect to the correctness of information in this document.
satelettronica

- Fit oil pan => page 188 .
- -> Install cover (arrow) with new gasket and spacer bushes.

  Tightening torque => 96 , 14 -bolt

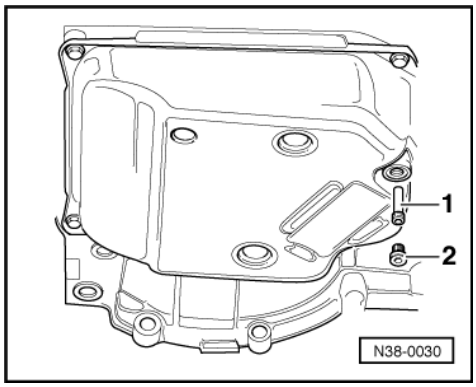

- -> Fit and tighten bolts for overflow pipe -1- => 192 , 2 -overflow pipe.
- After repairs, fit new seal to plug -2- and screw in hand-tight.

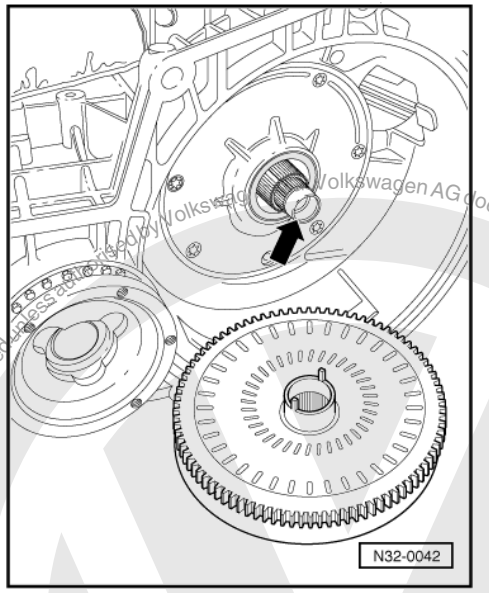

- -> Check now whether a sleeve bearing is present in turbine shaft => 3 .
- Before you now insert torque converter check whether torque converter has the proper code. Checking torque converter code => from 16 .
- In this case, sleeve bearing must be removed => 18 .
- Install torque converter => Page 16 .
- Install gearbox => Page 55 .
- Fill with 3 litres of ATF => Page 72 .
- Check gear oil level in final drive => page 214 .

Protected by copyright. Copying for private or commercial purposes, in part or in whole, is not permitted unless authorised by Volkswagen AG. Volkswagen AG does not guarantee or accept any liability with respect to the correctness of information in this document. Copyright by Volkswagen AG.
satelettronica

7.11 - Overview of all planetary gearbox adjustments

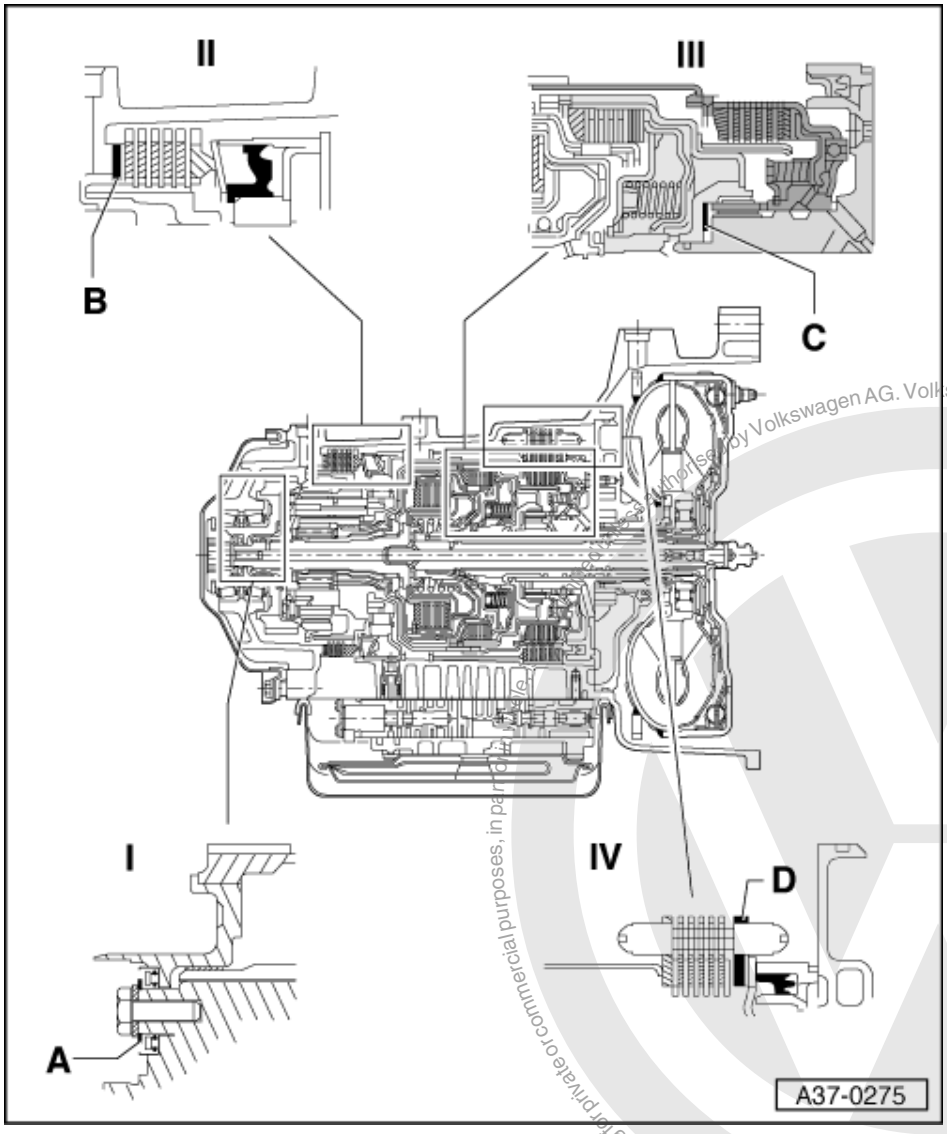

Protected by copyright. Copying for private or commercial purposes, in part or in whole, is not authorised by Volkswagen AG. Volkswagen AG does not guarantee or accept any liability with respect to the correctness of information in this document. Copyright by Volkswagen AG.
satelettronica

I = Planet carrier

- A - Shim
- Determining thickness => adjusting planet carrier, Page 133

II = Reverse gear brake -B1-

- B - Shim
- Determining thickness => adjusting reverse gear brake -B1-, Page 140

III = Clutch play

- C - Shim
- Determining thickness => adjusting clutch play between -K1- and -K2-, Page 146

IV = 2nd and 4th gear brake -B2-

- D - Outer plate or shim
- Determining thickness => adjusting 2nd and 4th gear brake -B2-, Page 152

7.12 - Adjusting planet carrier

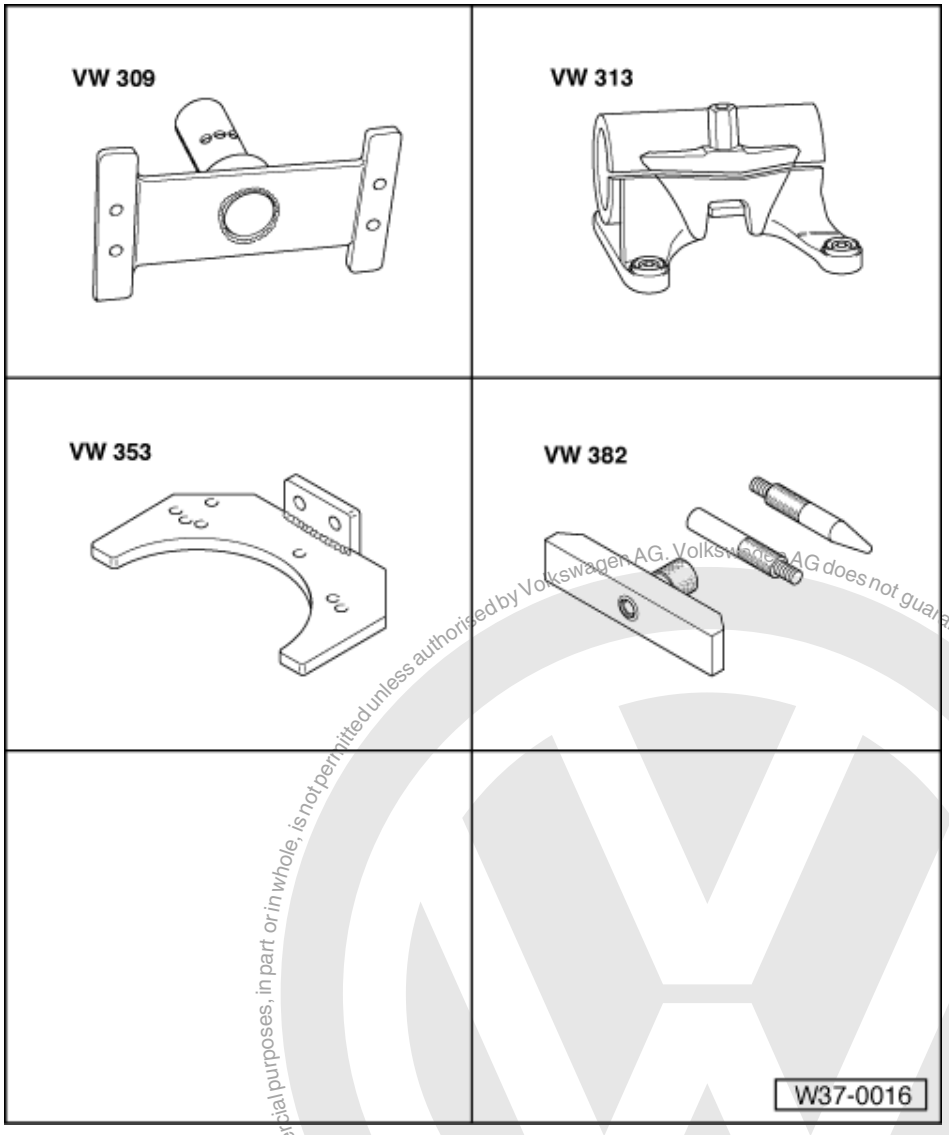

Special tools, workshop equipment, test and measuring appliances and auxiliary items required

- VW 309 Holding plate
- VW 313 Support clamp
- VW 353 Gearbox support
- VW 382 Measuring device
- Dial gauge

Protected by copyright. Copying for private or commercial purposes, in part or in whole, is not permitted unless authorised by Volkswagen AG. Volkswagen AG does not guarantee or accept any liability with respect to the correctness of information in this document. Copyright by Volkswagen AG.
satelettronica

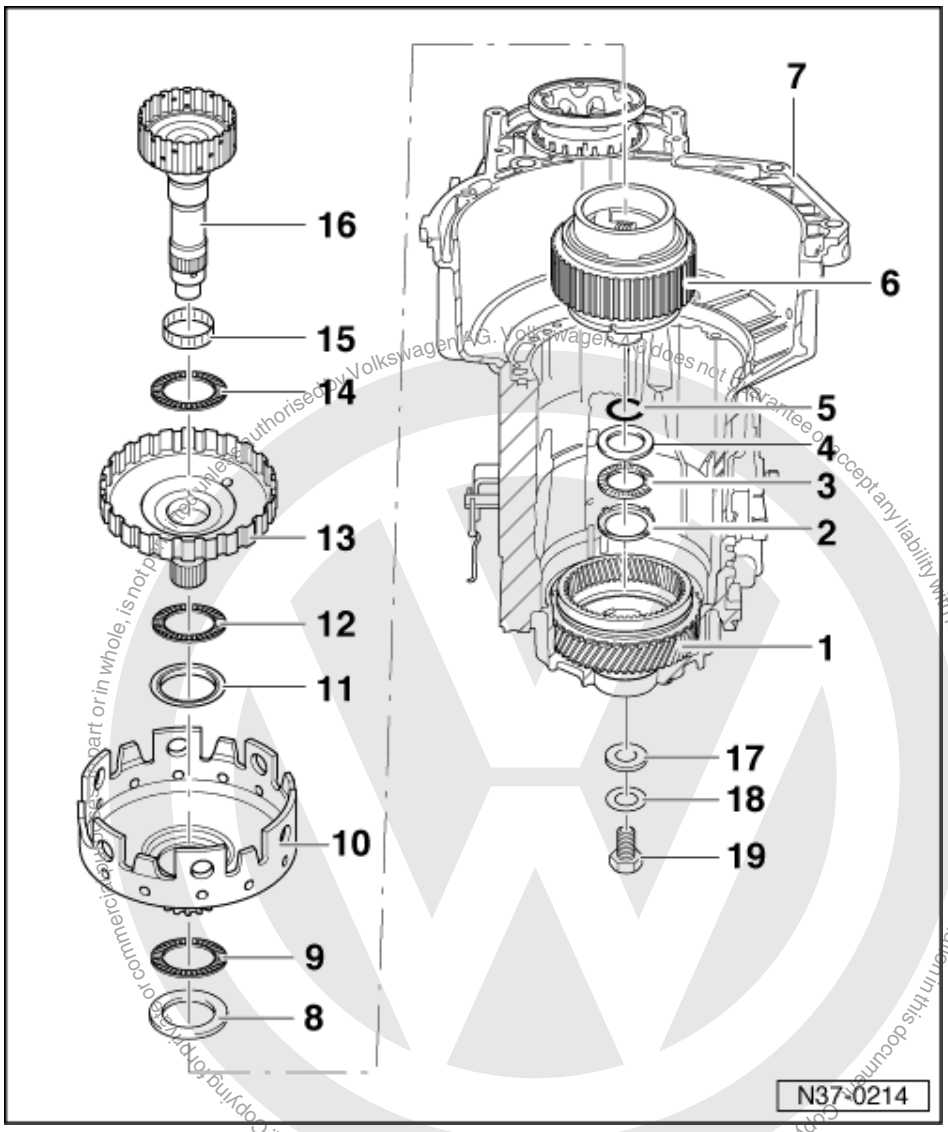

Overview of components to adjust planet carrier

- When adjusting planet carrier install components in gearbox housing without shim (item 17).

1 Input gear
- Do not remove to adjust the planet carrier
- Removing and installing input gear or axial needle bearing for planet carrier => Page 224

2 Axial needle bearing washer
- Insert smooth side in input gear

3 Axial needle bearing

4 Axial needle bearing washer

5 O-ring
- Insert into planet carrier => Assembling planet carrier, Page 107

satelettronica

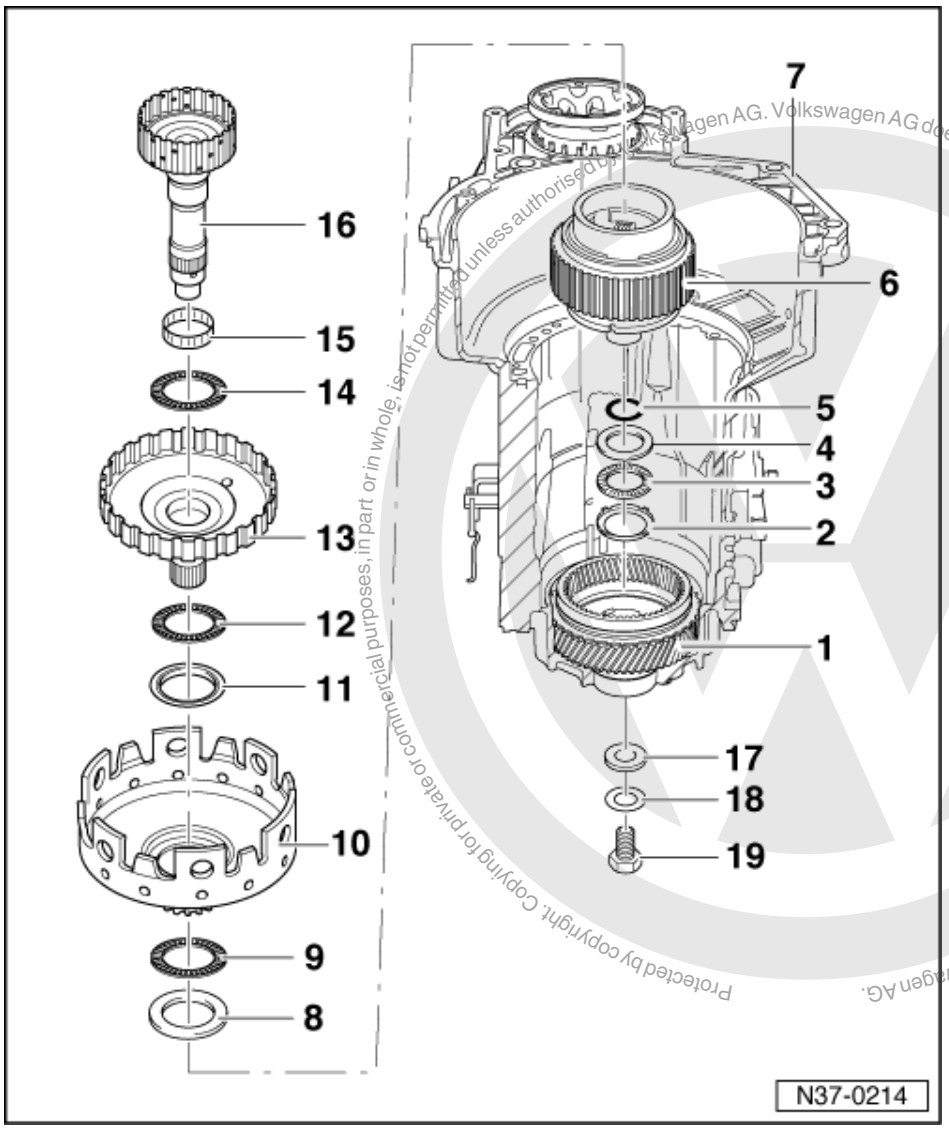

6 Planet carrier
7 Gearbox housing
- With input gear and axial needle bearing
- Axial needle bearing remains in input gear
- If axial needle bearing is damaged => Removing and installing input gear, Page 224

8 Washer
9 Axial needle bearing
10 Large sun gear
11 Washer
- Insert into large sun gear => Assembling planetary gearbox, Page 107

12 Axial needle bearing
13 Large input shaft

Protected by copyright. Copying for private or commercial purposes, in part or in whole, is not permitted unless authorised by Volkswagen AG. Volkswagen AG does not guarantee or accept any liability with respect to the correctness of information in this document. Copyright by Volkswagen AG.
satelettronica

Protected by copyright. Copying for private or commercial purposes, in whole, is not permitted unless authorised by Volkswagen AG. Volkswagen AG does not guarantee or accept any liability with respect to the correctness of information in this document. Copyright by Volkswagen AG.

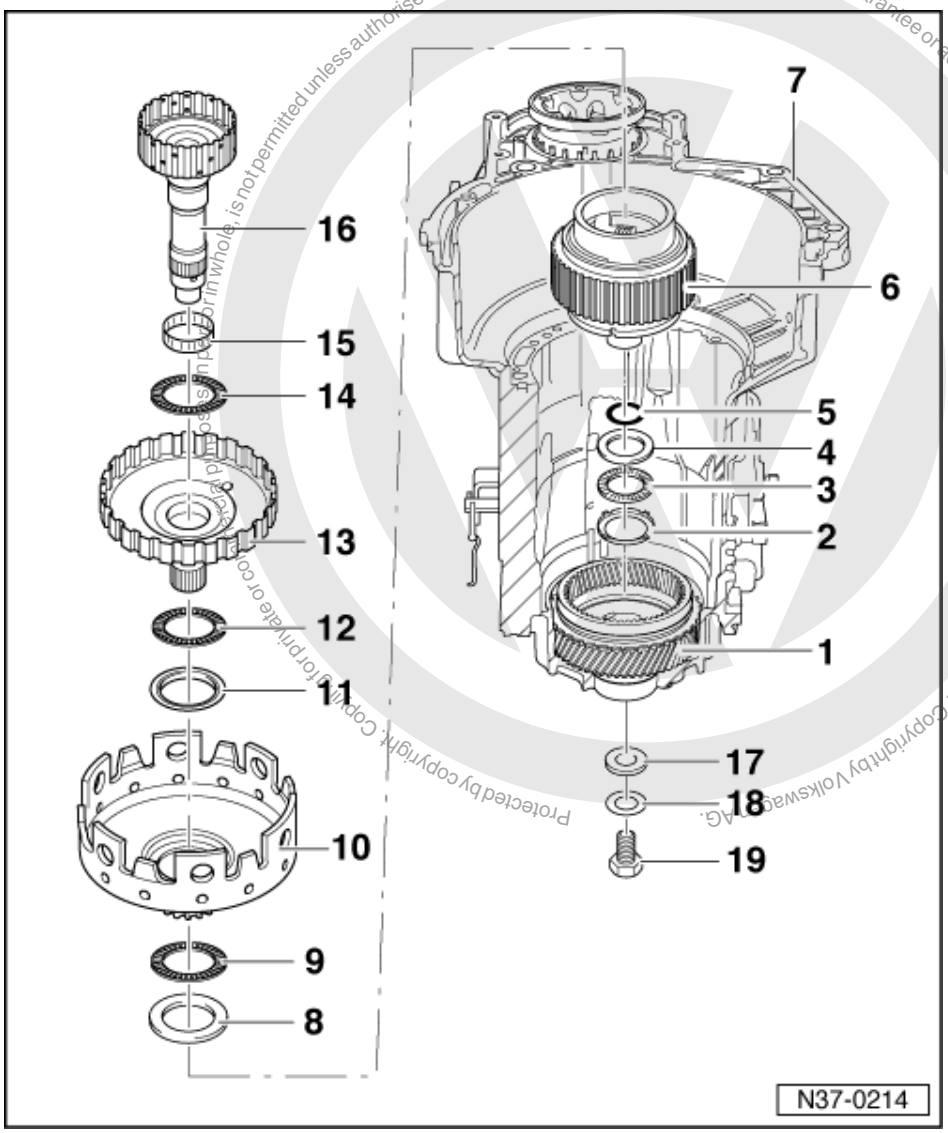

14 Axial needle bearing
15 Needle bearing
16 Small input shaft
17 Shim
- Do not install in planet carrier when adjusting
- 1 or 2 shims can be installed

18 Washer
19 Small input shaft bolt, 30 Nm

satelettronica

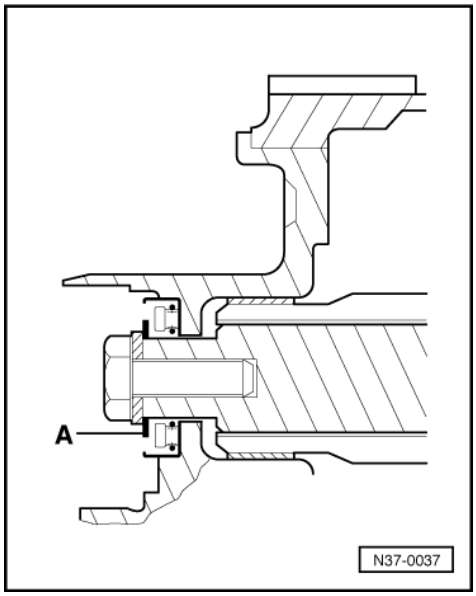

-> Determining shim -A-

- To adjust planet carrier, install all components (items 134 .

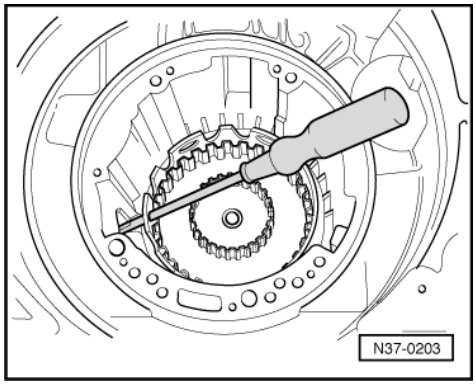

- Engage parking lock.
- -> Insert screwdriver through hole of large sun gear to loosen and tighten bolt for small input shaft.

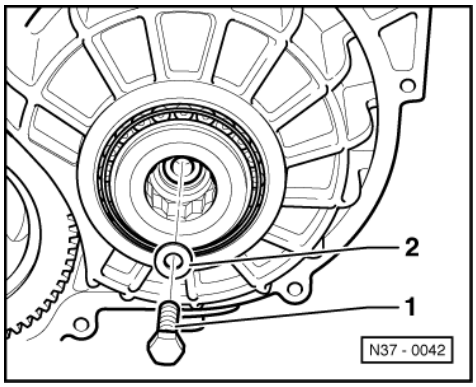

- -> Install small input shaft bolt -1- with washer -2- but without shim.

  Tightening torque => 136 , 19 -bolt

Protected by copyright. Copying for private or commercial purposes, in part or in whole is not permitted unless authorised by Volkswagen AG. Volkswagen AG does not guarantee or accept any liability with respect to the correctness of the information in this document. Copyright by Volkswagen AG.
satelittorica

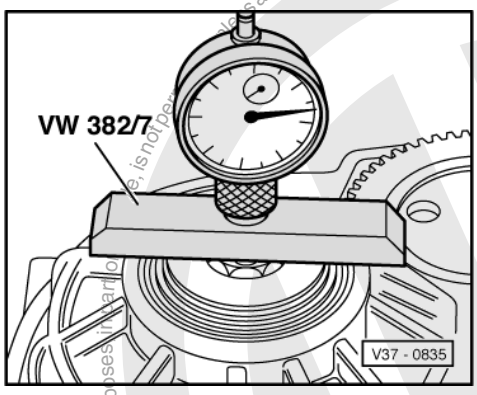

- -> Set up dial gauge VW 382/7 so that top of gauge is positioned on bolt head centre with 1 mm preload.
- Zero dial gauge.
- Push small input shaft up and take reading.

Example: Reading 2.00 mm
- Determine thickness of shim using table and find Part No. in parts catalogue.

Table of shims:

Gauge reading (mm)	Shims (mm)
1.26 ... 1.35	1.0
1.36 ... 1.45	1.1
1.46 ... 1.55	1.2
1.56 ... 1.65	1.3
1.66 ... 1.75	1.4
1.76 ... 1.85	1.5
1.86 ... 1.95	1.6
1.96 ... 2.05	1.7
2.06 ... 2.15	1.8
2.16 ... 2.25	1.9
2.26 ... 2.35	1.0 + 1.0
2.36 ... 2.45	1.0 + 1.1
2.46 ... 2.55	1.1 + 1.1
2.56 ... 2.65	1.1 + 1.2
2.66 ... 2.75	1.2 + 1.2
2.76 ... 2.85	1.2 + 1.3
2.86 ... 2.95	1.3 + 1.3
2.96 ... 3.05	1.3 + 1.4
3.06 ... 3.15	1.4 + 1.4
3.16 ... 3.25	1.4 + 1.5

Example:
Measurement 2.00 mm -
Insert 1.7 mm thick shim.
- Remove small input shaft bolt.

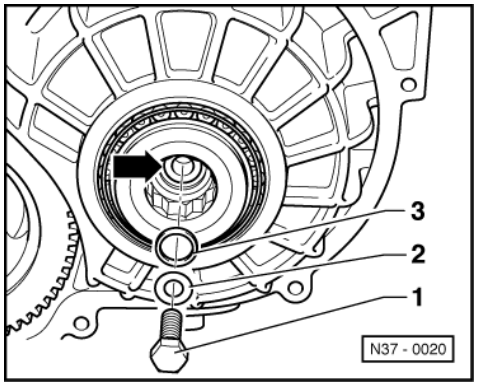

Protected by copyright. Copyright by Volkswagen AG. Volkswagen AG does not guarantee or accept any liability with respect to the correctness of information in this document. Copyright by Volkswagen AG.
satelettronica

- -> Fit determined shim -3- onto small input shaft (arrow).
- Tighten small input shaft bolt -1- with washer -2-

  Tightening torque => 136 , 19 -bolt

- Carry out planet carrier check measurement.

Planet carrier check measurement

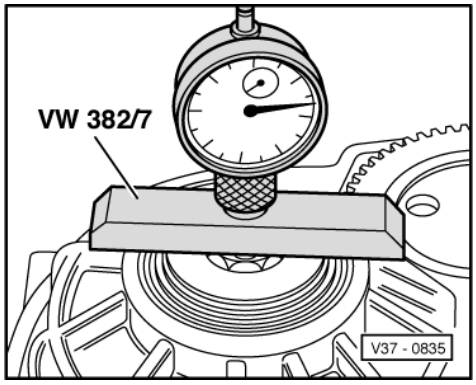

- -> Insert dial gauge in VW 382/7 and place the tip on the bolt of the small input shaft.
- Move small input shaft up and down and take reading of play on dial gauge.

Play:

min. = 0.23 mm

max. = 0.37 mm

If planet carrier was adjusted with reverse gear brake -B1- and free wheel removed, then reverse gear brake -B1- must be installed before planet carrier is installed => Assembling planetary gearbox, 107 .

Protected by copyright. Copying for private or commercial purposes, in part or in whole, is not permitted unless authorised by Volkswagen AG. Volkswagen AG does not guarantee or accept any liability with respect to the correctness of information in this document. Copyright by Volkswagen AG.
satelettronica

7.13 - Adjusting reverse gear brake -B1-

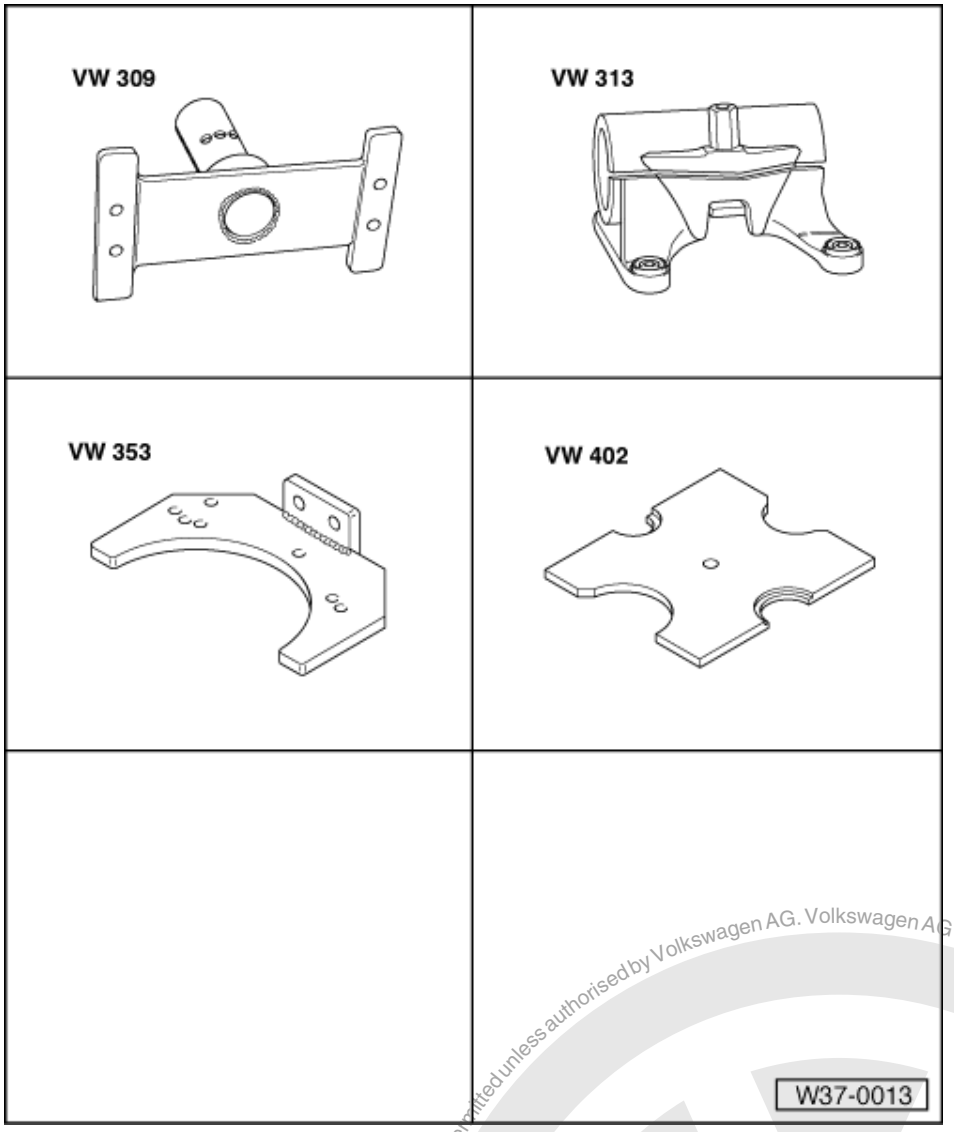

Special tools, workshop equipment, test and measuring appliances and auxiliary items required

- VW 309 Holding plate
- VW 313 Support clamp
- VW 353 Gearbox support
- VW 402 Thrust plate
- Depth gauge
- Straightedge
- Feeler gauge

Protected by copyright. Copying for private or commercial purposes, in part or in whole, is not permitted unless authorised by Volkswagen AG. Volkswagen AG does not guarantee or accept any liability with respect to the correctness of information in this document. Copyright by Volkswagen AG.
satelettronica

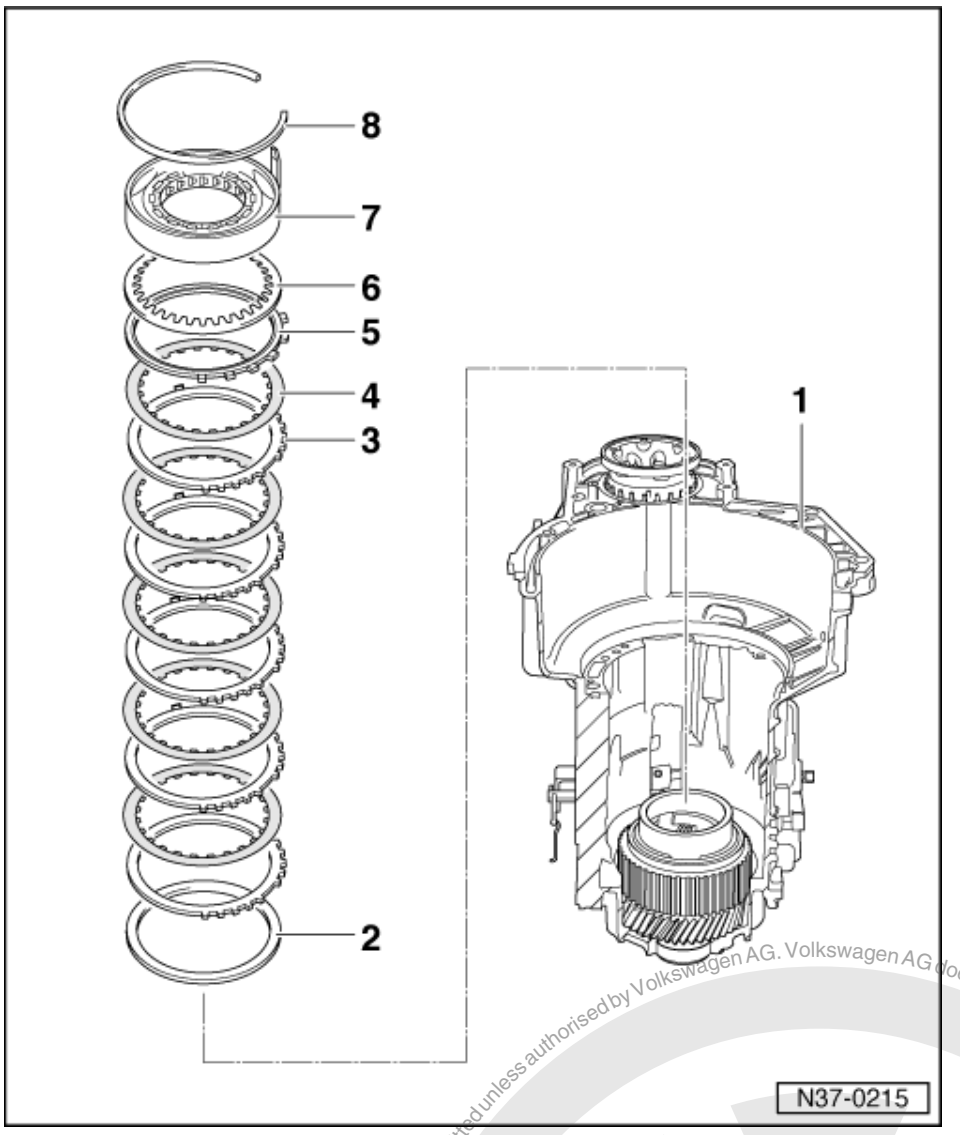

Overview of components to adjust reverse gear brake -B1-

1 Gearbox housing
- With input gear and planet carrier installed

2 Shim
- Do not install when adjusting -B1-
- 1 or 2 shims can be installed

3 Outer plate -B1-
- Quantity => from Page 3

4 Inner plate -B1-
- Quantity => from Page 3

5 Pressure plate
- Install with flat side facing plates
- Spare part is allocated according to gearbox code letters

Protected by copyright. Copying for private or commercial purposes, in part or in whole, is not permitted unless authorised by Volkswagen AG. Volkswagen AG does not guarantee or accept any liability with respect to the correctness of information in this document. Copyright by Volkswagen AG.
satelettronica

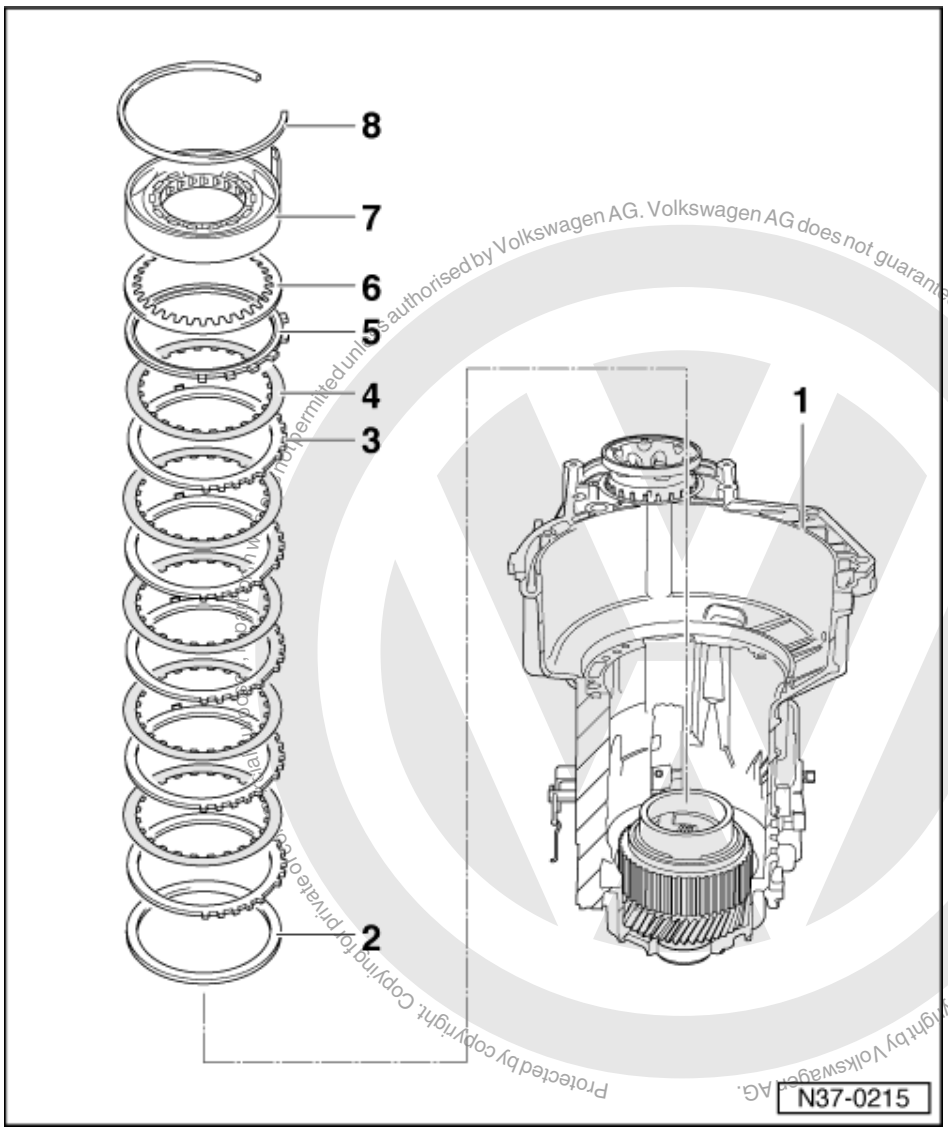

Protected by copyright. Copying for private or commercial purposes, in part or in whole, is not permitted unless authorised by Volkswagen AG. Volkswagen AG does not guarantee or accept any liability with respect to the correctness of information in this document. Copyright by Volkswagen AG.

6 Dished washer
- Convex side faces towards freewheel

7 Freewheel with -B1- piston

Before removing or installing free wheel, remove valve chest and take out sealing plug => 209 , - 30 -.

8 Circlip

satelettronica

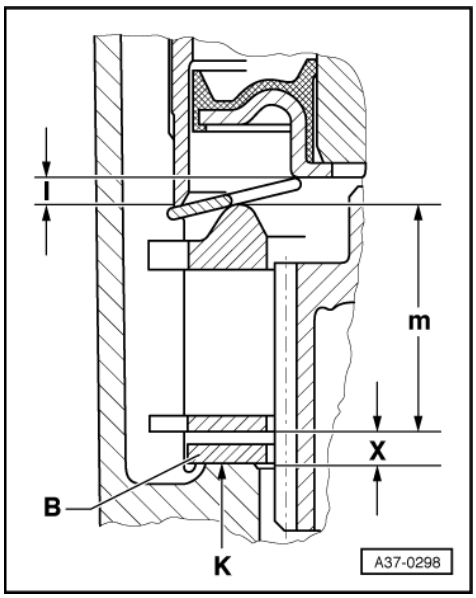

-> Determining thickness of shim -B-

- For the measuring sequence the gearbox housing must be clamped into assembly stand so that the input gear is facing downwards, as illustrated on => Page 141 .

Shim thickness is determined by gap "x" and selected from table, => Page 144 .

- B = Shim
- x = Gap
- I = Position of piston in freewheel
- m = Height of plate set including pressure plate
- K = Constant = 26.9 mm

"K" is determined by installation height in gearbox housing and is not adjustable.

Calculating "I":

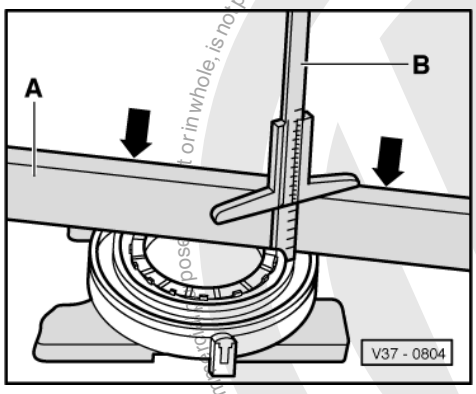

- -> Press piston in direction of arrow as far as stop.
- Place straightedge "A" onto outer race of freewheel.
- Measure to inner edge of piston with depth gauge "B".

Example:

Reading	= 51.8 mm
- Straightedge	= 48.2 mm

satelettronica
Protected by copyright. Copyright by Volkswagen AG. Volkswagen AG does not guarantee or accept any liability with respect to the correctness of information in this document. Copying or in whole, is not permitted unless authorised by Volkswagen AG.

Calculated size l	= 3.6 mm

Calculating "m":

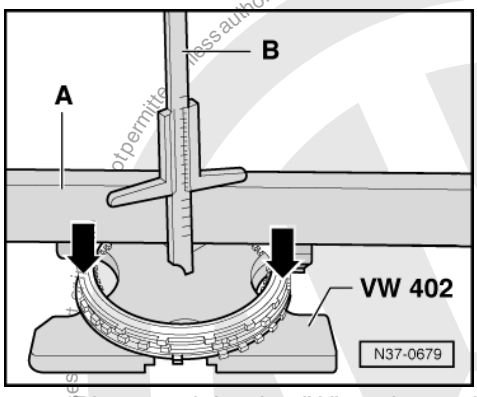

- -> Place straightedge "A" on thrust plate.
- Compress set of plates including pressure plate in direction of arrow and measure the thickness of plate set with depth gauge "B".

Example:

Reading	= 73.5 mm
- Straightedge	= - 48.2 mm
Calculated size m	= 25.3 mm

- Determine size of shims according to table:

Table of shims:

Gap "x" (mm)	Shims (mm)
2.36 ... 2.45	1.0
2.46 ... 2.55	1.1
2.56 ... 2.65	1.2
2.66 ... 2.75	1.3
2.76 ... 2.85	1.4
2.86 ... 2.95	1.5
2.96 ... 3.05	1.6
3.06 ... 3.15	1.7
3.16 ... 3.25	1.8
3.26 ... 3.35	1.9
3.36 ... 3.45	1.0 + 1.0
3.46 ... 3.55	1.0 + 1.1
3.56 ... 3.65	1.1 + 1.1
3.66 ... 3.75	1.1 + 1.2
3.76 ... 3.85	1.2 + 1.2
3.86 ... 3.95	1.2 + 1.3
3.96 ... 4.05	1.3 + 1.3
4.06 ... 4.15	1.3 + 1.4
4.16 ... 4.25	1.4 + 1.4

- Ascertain thickness of shims according to table and determine Part No. from parts catalogue.
- After determining shim for -B1- carry out check measurement.

Protected by copyright. Copyright by Volkswagen AG.
Copyright by Volkswagen AG. Volkswagen AG does not guarantee or accept any liability with respect to the correctness of information in this document.
satelettronica

Reverse gear brake -B1- check measurement

- Install parts up to freewheel and secure with circlip => Assembling planetary gearbox, Page 107 .

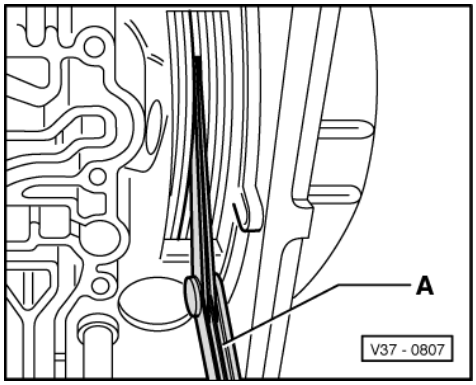

- -> Measure play between plates using feeler gauge "A".

  Play:
  min. = 1.25 mm
  max. = 1.55 mm

Protected by copyright. Copying for private or commercial purposes, in part or in whole, is not permitted unless authorised by Volkswagen AG. Volkswagen AG does not guarantee or accept any liability with respect to the correctness of information in this document. Copyright by Volkswagen AG.
satelettronica

7.14 - Adjusting clutch play between -K1- and -K2-

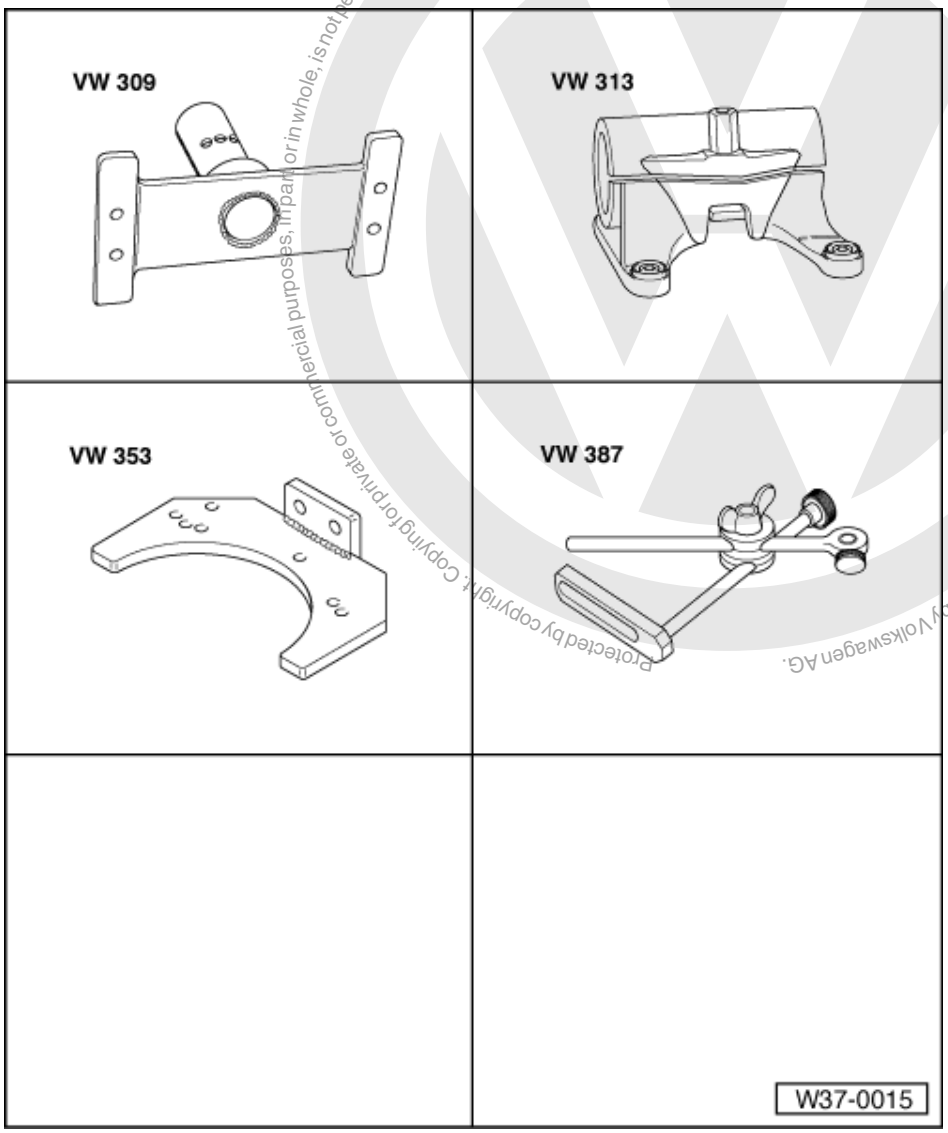

Protected by copyright. Copying for private or commercial purposes, in part or in whole, is not permitted unless authorised by Volkswagen AG. Volkswagen AG does not guarantee or accept any liability with respect to the correctness of information in this document. Copyright by Volkswagen AG.

satelettronica

Special tools, workshop equipment, test and measuring appliances and auxiliary items required

- VW 309 Holding plate
- VW 313 Support clamp
- VW 353 Gearbox support
- VW 387 Universal dial gauge bracket
- Depth gauge
- Straightedge
- Dial gauge

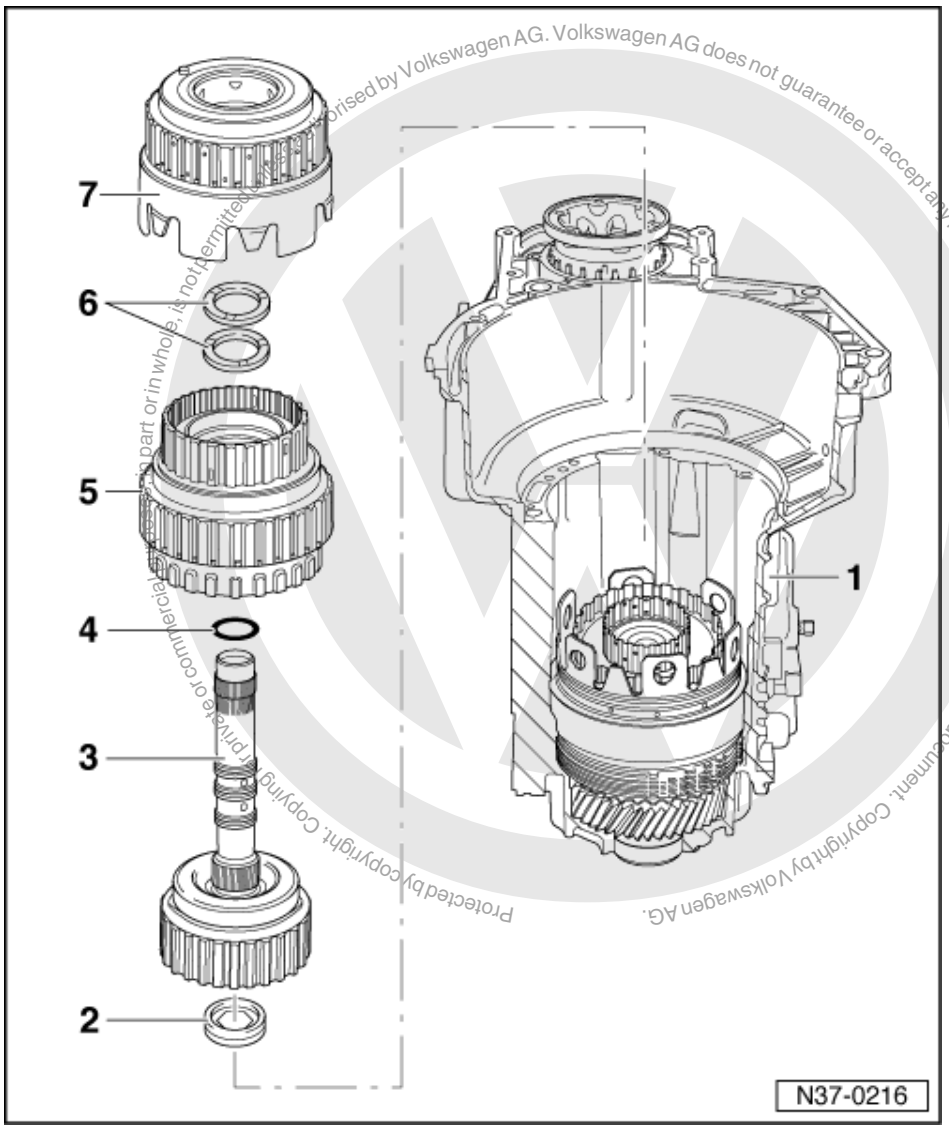

Protected by copyright. Copying for private or commercial purposes, in part or in whole, is not permitted unless authorised by Volkswagen AG. Volkswagen AG does not guarantee or accept any liability with respect to the correctness of information in this document. Copyright by Volkswagen AG.

- To adjust clutch play install components without shim (item 107 .

1 Gearbox housing
- Planetary gearbox installed up to small input shaft => assembling planetary gearbox, Page 107

2 Axial needle bearing with washer
- Axial needle bearing faces towards small input shaft
- Washer faces towards -K3-

3 3rd and 4th gear clutch -K3- with turbine shaft
- On some gearboxes, clutches -K1- and -K3- may be pressed together => 107

4 O-ring

satelettronica

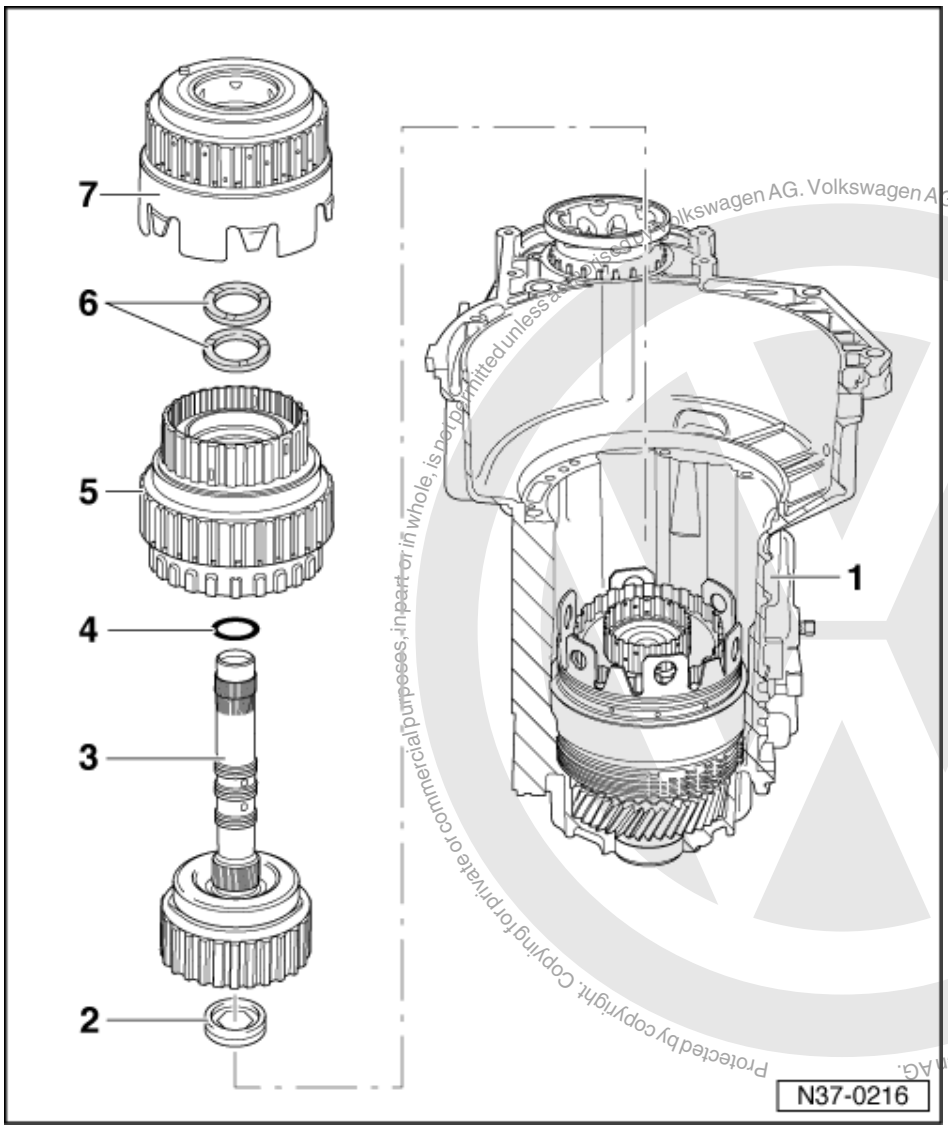

5 1st to 3rd gear clutch -K1- with turbine shaft
- On some gearboxes, clutches -K1- and -K3- may be pressed together => 107

6 Shim
- Do not install when adjusting clutch play
- Up to 3 shims can be installed

7 Reverse gear clutch -K2-

Determining thickness of shim -C-

Conditions:

- Planet carrier installed and adjusted => Assembling planetary gearbox, Page 107
- Gearbox housing must be clamped into assembly stand so that the input gear is facing downwards for the measuring sequence, as illustrated on => Page 146 .

Protected by copyright. Copying for private or commercial purposes, in part or in whole, is not permitted unless authorised by Volkswagen AG. Volkswagen AG does not guarantee or accept any liability with respect to the correctness of information in this document. Copyright by Volkswagen AG.
satelettronica

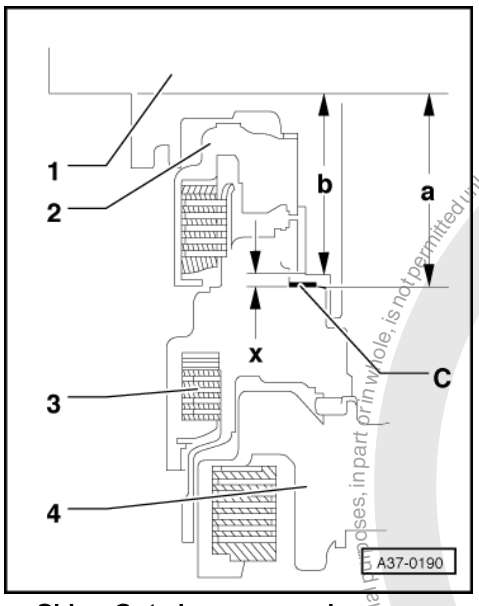

-> Shim -C- to be measured
C - Shim
1 - ATF pump
2 - Reverse gear clutch -K2-
3 - 1st to 3rd gear clutch -K1-
4 - 4th gear clutch -K3-
- Calculating thickness of shim. Determine gap "x" and calculate shim thickness.

Gap x = a - b

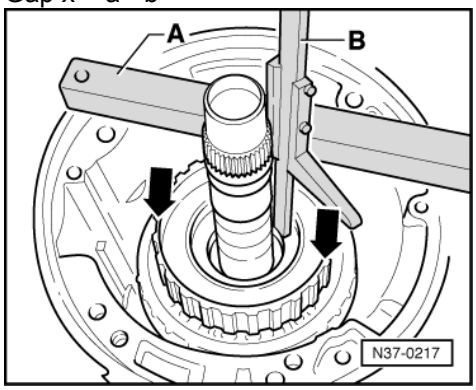

Calculating "a":
- -> Place straightedge "A" onto gearbox housing.
- Press -K1- down in direction of arrow and measure distance into -K1- with depth gauge "B".

Example:
Reading 1 = 88.5 mm

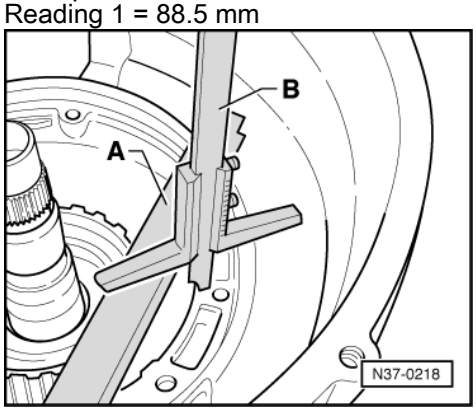

Protected by copyright. Copying for private or commercial purposes, in part or in whole, is not permitted unless authorised by Volkswagen AG. Volkswagen AG does not guarantee or accept any liability with respect to the correctness of information in this document. Copyright by Volkswagen AG.
satelettronica

- -> Measure with depth gauge "B" to pump flange on gearbox housing.

Example:

Reading 2 = 34.3 mm

Reading 1	=	88.5 mm
- Reading 2	=	- 34.3 mm
Calculated size a	=	54.2 mm

= Size measured from pump flange/gearbox housing into -K1-.

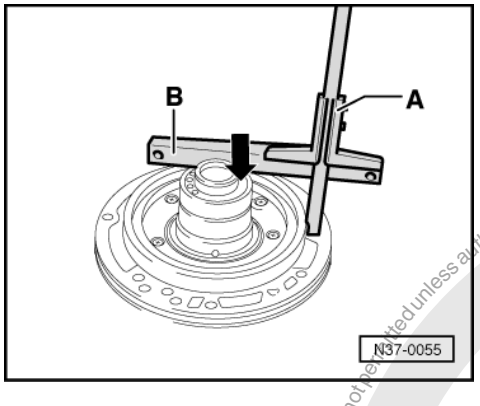

Calculating "b":

- Place new paper gasket onto ATF pump.
- -> Place straightedge -B- onto stator support (arrow) and measure with depth gauge -A- to gasket of pump flange.

Example:

Reading	=	70.5 mm
- Straightedge	=	- 19.5 mm
Calculated size b	=	51.0 mm

Gap x = a - b

= 54.2 mm - 51.0 mm = 3.2 mm

- Determine size of shim according to table:

Table of shims:

gap"x" (mm)	Thickness of required shim (mm)	Colour of required shims
... 2.54	1.4	white
2.55 ... 3.09	2.0	blue + blue
3.10 ... 3.49	2.4	green + green
3.50 ... 3.89	2.8	white + white
3.90 ... 4.29	3.2	black + black
4.30 ... 4.69	3.6	grey + grey

Protected by copyright. Copying for private or commercial purposes, in part or in whole, is not permitted unless authorised by Volkswagen AG. Volkswagen AG does not guarantee or accept any liability with respect to the correctness of information in this document. Copyright by Volkswagen AG.
satelettronica

gap"x" (mm)	Thickness of required shim (mm)	Colour of required shims
4.70 ... 5.04 5.05 ... 5.25	4.0 4.2	green + green + black green + green + grey

- Ascertain thickness of shims according to table and determine Part No. from parts catalogue.

The shims have various thicknesses:

blue	=	1.0 mm
green	=	1.2 mm
white	=	1.4 mm
black	=	1.6 mm
grey	=	1.8 mm

In the example above, x = 3.2 mm was calculated. Thus two green shims would be used in this example.

If exchange component is used:

More than 3 shims for adjusting play between clutches -K1- and -K2- are included in the exchange component, so that the thickness of the required shims can be determined as described above.

Check measurement (clutch play)

- The clutch play cannot be measured until the ATF pump has been installed.
- Attach dial gauge holder to gearbox housing and place dial gauge on turbine shaft with a preload of 1 mm.

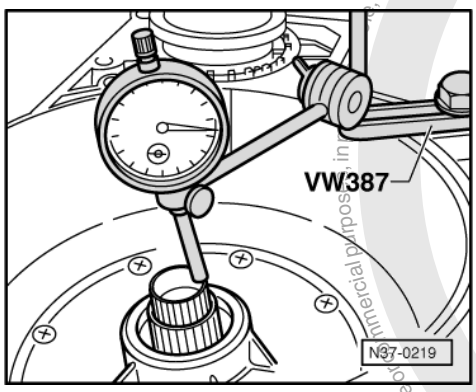

- -> Move turbine shaft up and down and read play on dial gauge.

  Play:
  min. = 0.5 mm
  max. = 1.2 mm

If turbine shaft cannot be moved, put gearbox in installation position and repeat measurement check.

Protected by copyright. Copying for private or commercial purposes, in part or in whole, is not permitted unless authorised by Volkswagen AG. Volkswagen AG does not guarantee or accept any liability with respect to the correctness of information in this document. Copyright by Volkswagen AG.
satelettronica

7.15 - Adjusting 2nd and 4th gear brake -B2-

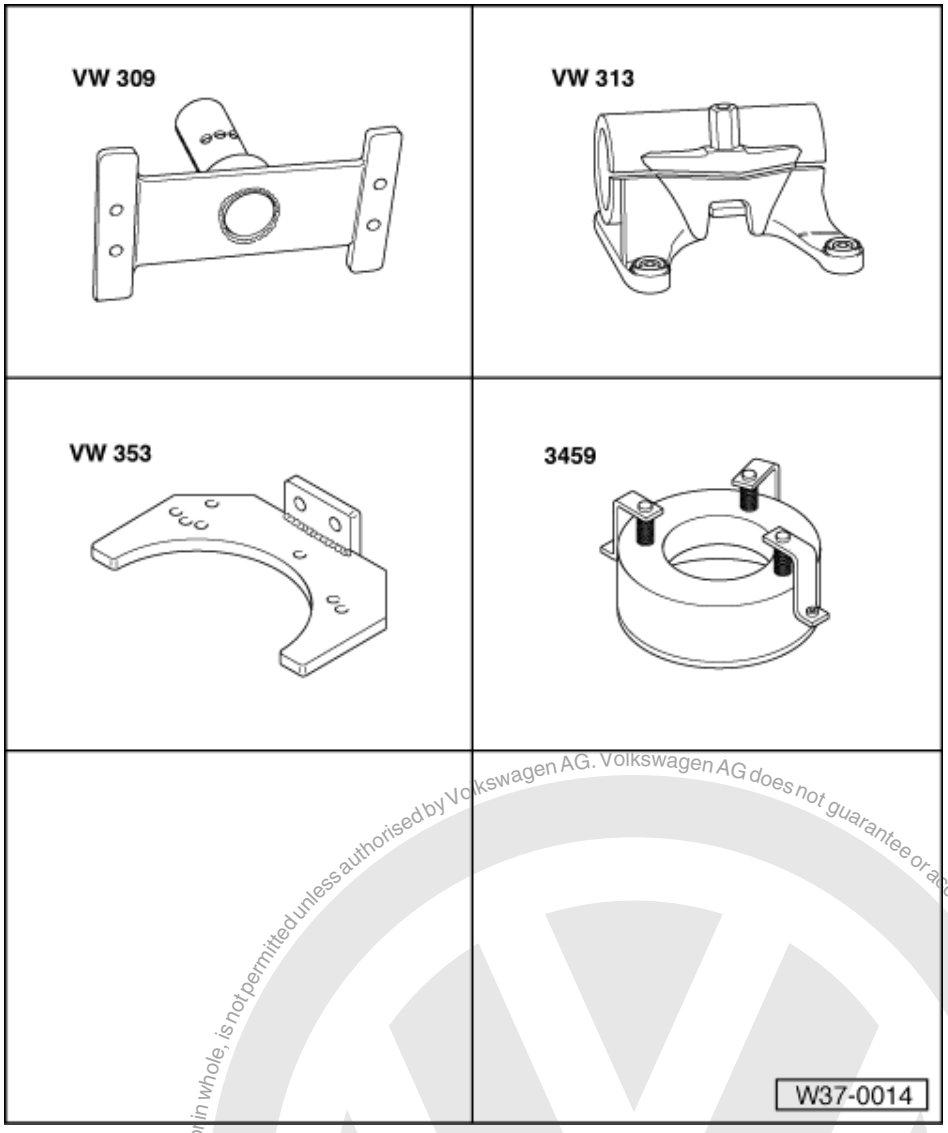

Special tools, workshop equipment, test and measuring appliances and auxiliary items required

- VW 309 Holding plate
- VW 313 Support clamp
- VW 353 Gearbox support
- 3459 Adjustment tool
- Depth gauge
- Straightedge

Protected by copyright. Copying for private or commercial purposes, in part or in whole, is not permitted unless authorised by Volkswagen AG. Volkswagen AG does not guarantee or accept any liability with respect to the correctness of information in this document. Copyright by Volkswagen AG.
satelettronica

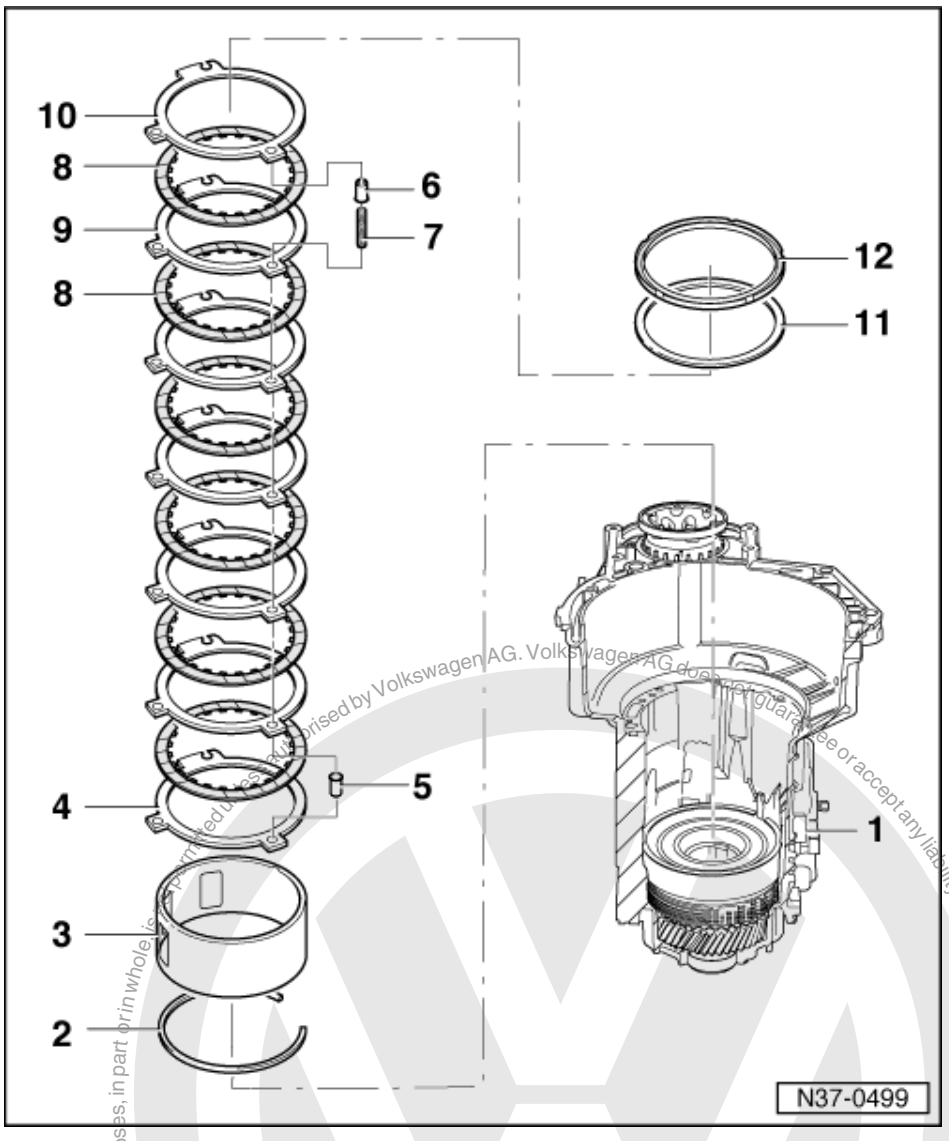

Adjusting 2nd and 4th gear brake for all gearboxes except CKY

Adjustment procedure for gearbox CKY => page 159 .

Play of brake -B2- is determined by the thickness of the shim -11-.

- To adjust, install components without shim (item 11), without last outer plate (item 10) and without spring caps (item 6).

1 Gearbox housing
2 Circlip
- For supporting tube

3 Supporting tube -B2-
- Spare part is allocated according to gearbox code letters
- Insert so that notch locates on freewheel wedge

Protected by copyright. Copying for private or commercial purposes, in part or in whole, is not permitted unless authorised by Volkswagen AG. Volkswagen AG does not guarantee or accept any liability with respect to the correctness of information in this document. Copyright by Volkswagen AG.
satelettronica

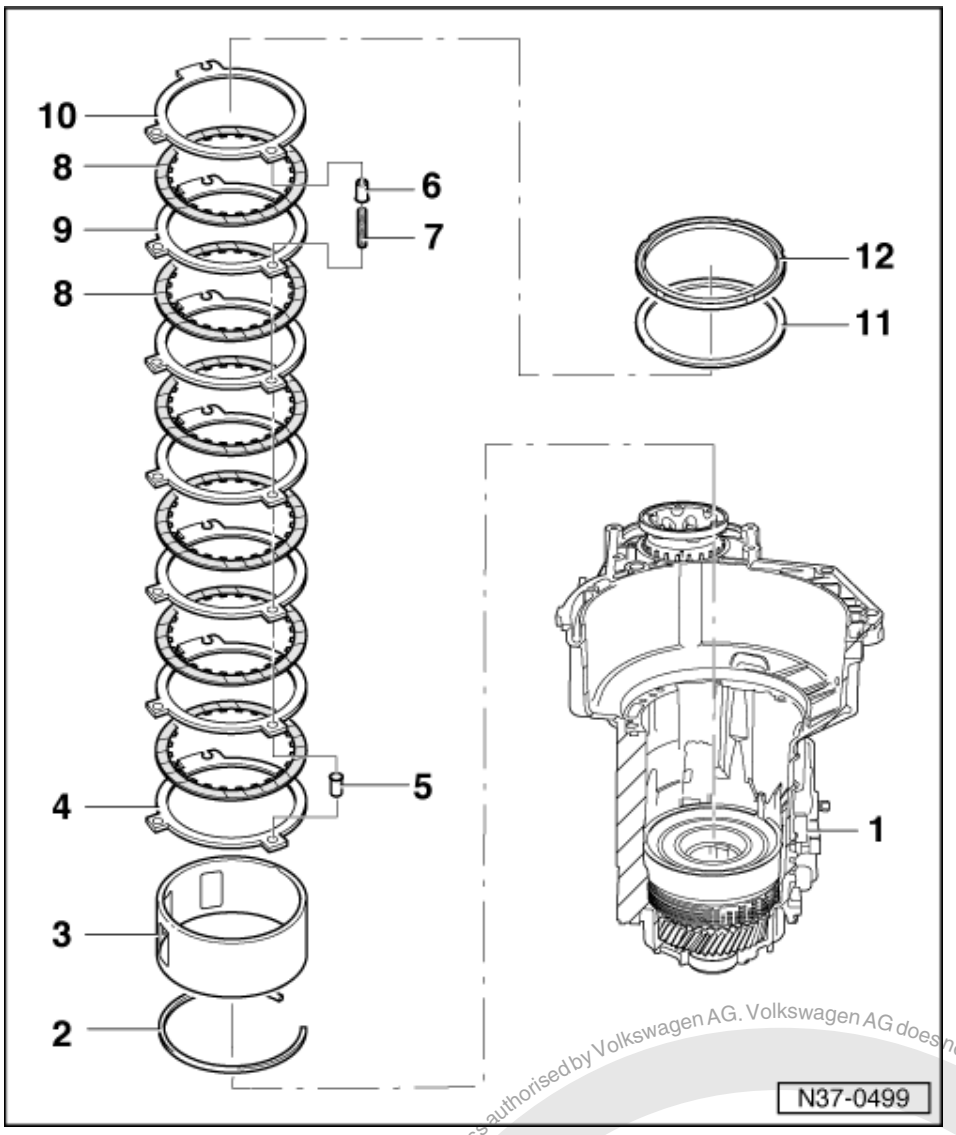

4 Outer plate -B2-
- 3 mm thick

5 Spring cap
- Install after installing first outer plate (item 4)

6 Spring cap
- Do not install when adjusting -B2-
- Install before installing last outer plate

7 Spring
- Spare part is allocated according to gearbox code letters

8 Inner plate -B2-
- Quantity => from Page 3
- Spare part is allocated according to gearbox code letters

Protected by copyright. Copyright for private or commercial purposes, in part or in whole, is not permitted unless authorised by Volkswagen AG. Volkswagen AG does not guarantee or accept any liability with respect to the correctness of information in this document. Copyright by Volkswagen AG.
satelettronica

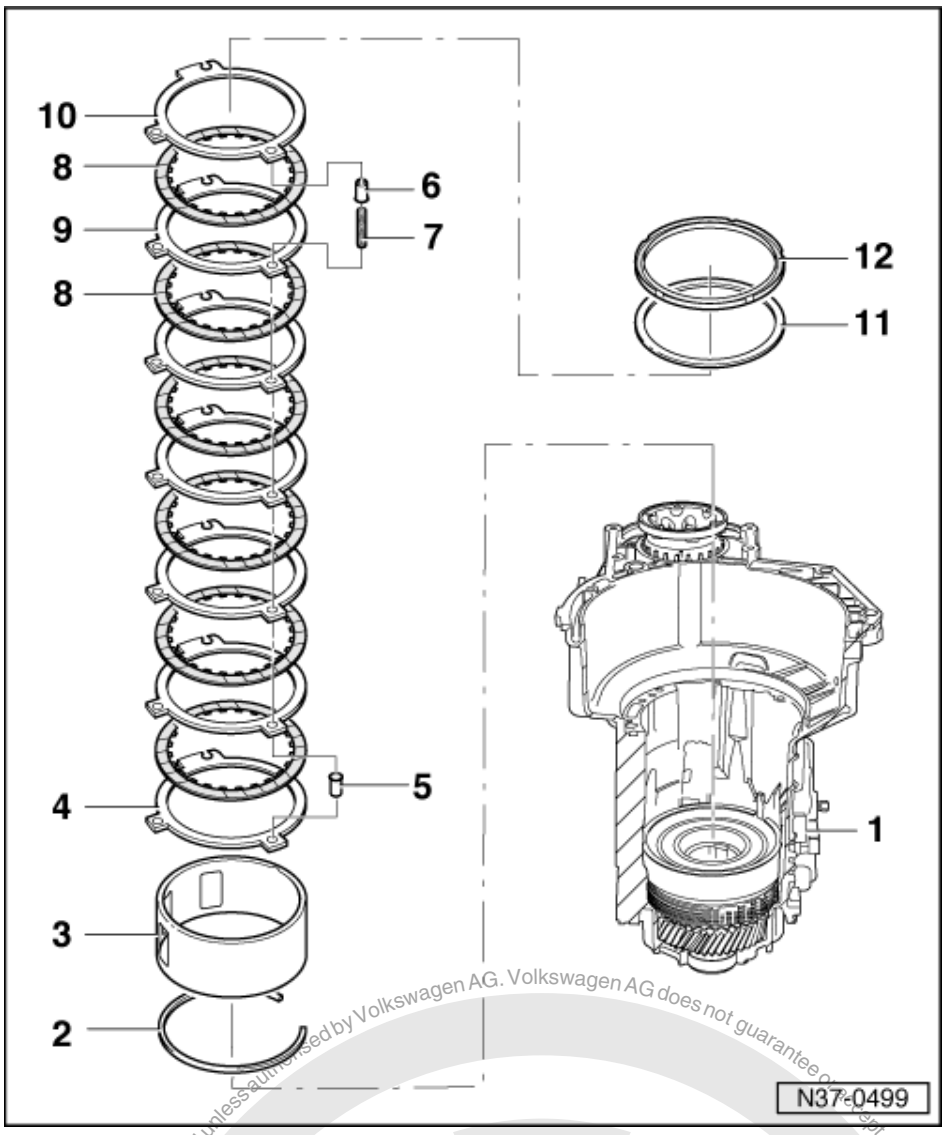

9 Outer plate -B2-
- Always install 2 mm thick outer plates
- Quantity => from Page 3

10 Outer plate -B2-
- 3 mm thick
- Do not install when adjusting -B2-

11 Shim
- Do not install when adjusting -B2-

12 Retaining ring
- Inserted with smooth side facing last inner plate (item 8) when adjusting -B2-.

Determining shim(s)

The thickness of the shim(s) is determined by gap x. For this the formula

Protected by copyright. Copying for private or commercial purposes, in part or in whole, is not permitted unless authorised by Volkswagen AG. Volkswagen AG does not guarantee or accept any liability with respect to the correctness of information in this document. Copyright by Volkswagen AG.
satelettronica

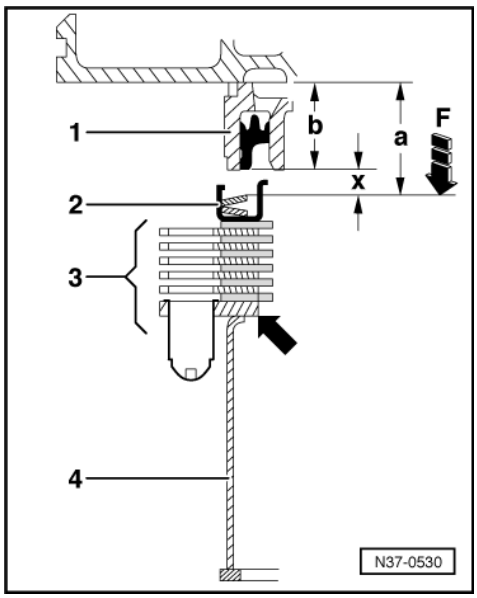

-> Gap x = a - b - 2.65 mm

must be used. The measuring points are shown in the illustration to help understanding the formula. Special tool 3459, which exerts a force -F- onto the plate packet via the retaining ring, is not illustrated.

Determining dimension a => Page 156 .

Determining dimension b => Page 157 .

2.65 mm - The amount for settling is taken into account by force F.

1 - ATF pump

2 - Retaining ring

3 - Plates for -B2- without last outer plate

4 - Supporting tube

The first outer plate installed -arrow- and the last outer plate (do not install for measurement!) are always 3 mm thick.

Calculating dimension "a":

Assemble planetary gearbox up to the last -B2- inner plate, => Page 107 . The last outer plate and shim are not installed.

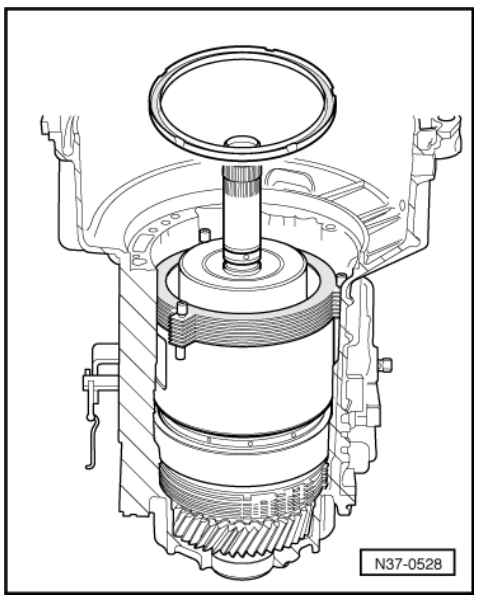

Protected by copyright. Copying for private or commercial purposes, in part or in whole, is not permitted unless authorised by Volkswagen AG. Volkswagen AG does not guarantee or accept any liability with respect to the correctness of information in this document. Copyright by Volkswagen AG.
satelettronica

- -> Place retaining ring with smooth side onto last inner plate.
- Place 3459 onto retaining ring and turn so that the 3 clips align with the 3 holes for the ATF pump.
- Bolt 3459 to flange for ATF pump with 5 Nm.

The plate packet for -B2- is now pressed together for the measurements.

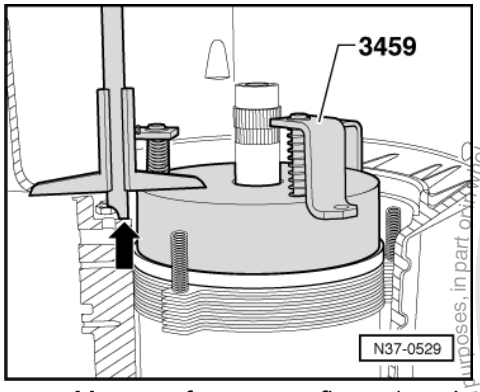

- -> Measure from pump flange/gearbox housing -arrow- to 3459 with depth gauge.

Dimension a = Height of 3459 in mm - measured value

Example:

Height of 3459	=	60.0 mm
- Measured value	=	- 32.3 mm
Calculated value a	=	27.3 mm

- Note calculated value a.
- Remove 3459.
- Remove retaining ring.

Calculating dimension "b":

- Push piston into ATF pump onto stop.
- Place new paper gasket onto ATF pump.

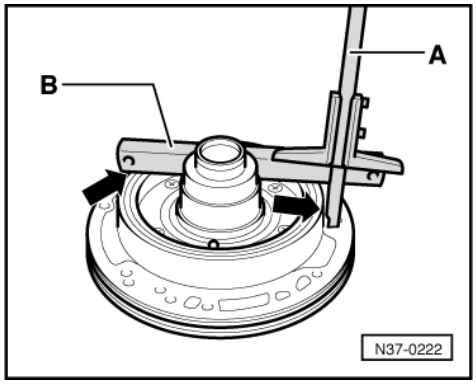

- -> Place straightedge "B" onto stator support (arrow) and measure with depth gauge "A" to gasket of pump flange.

Example:

Measured value	=	39.8 mm
- Straightedge	=	- 19.5 mm
Calculated value b	=	20.3 mm

- Note calculated value b.

Protected by copyright. Copying for private or commercial purposes, in part or whole, is not permitted unless authorised by Volkswagen AG. Volkswagen AG does not guarantee or accept any liability with respect to the correctness of information in this document. Copyright by Volkswagen AG.
satelettronica

Gap x = a - b - 2.65 mm

Gap x = 27.3 - 20.3 - 2.65 mm = 4.35 mm

- Determine size of shim(s) according to table:

Table of shims:

Gap "x" (mm)	Shims (mm)
3.25 ... 3.50	1.00
3.51 ... 3.75	1.25
3.76 ... 4.00	1.50
4.01 ... 4.25	1.75
4.26 ... 4.50	1.00 + 1.00
4.51 ... 4.75	1.00 + 1.25
4.76 ... 5.00	1.25 + 1.25
5.01 ... 5.25	1.25 + 1.50
5.26 ... 5.50	1.50 + 1.50
5.51 ...5.75	1.50 + 1.75
5.76 ...6.00	1.75 + 1.75

- Ascertain thickness of shim(s) according to table and determine Part No. from parts catalogue.

  In this example two shims must be installed (each 1.00mm thick).

- Fit three spring caps onto pressure springs.
- Insert last outer plate -3 mm thick-.

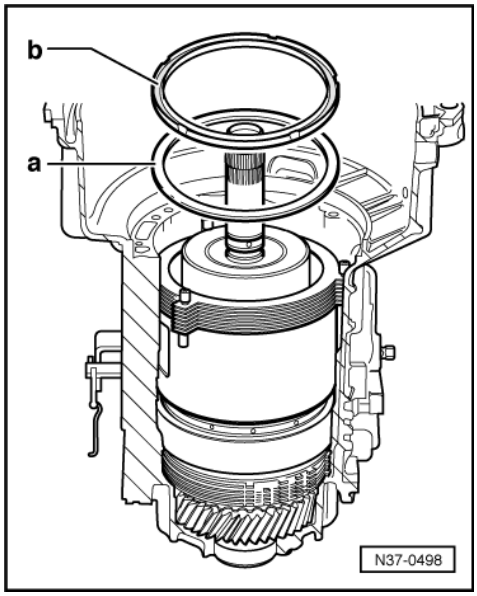

- -> Insert determined shim(s) -a-.
- Place retaining ring -b- onto shim(s). Smooth side facing shim.
- Further installation instructions are described => from page 117 .

Protected by copyright. Copyright by Volkswagen AG.
Copyright by Volkswagen AG. Volkswagen AG does not guarantee or accept any liability with respect to the correctness of information in this document. Copying for private or commercial purposes, in part or in whole, is not permitted unless authorised by Volkswagen AG.
satelettronica

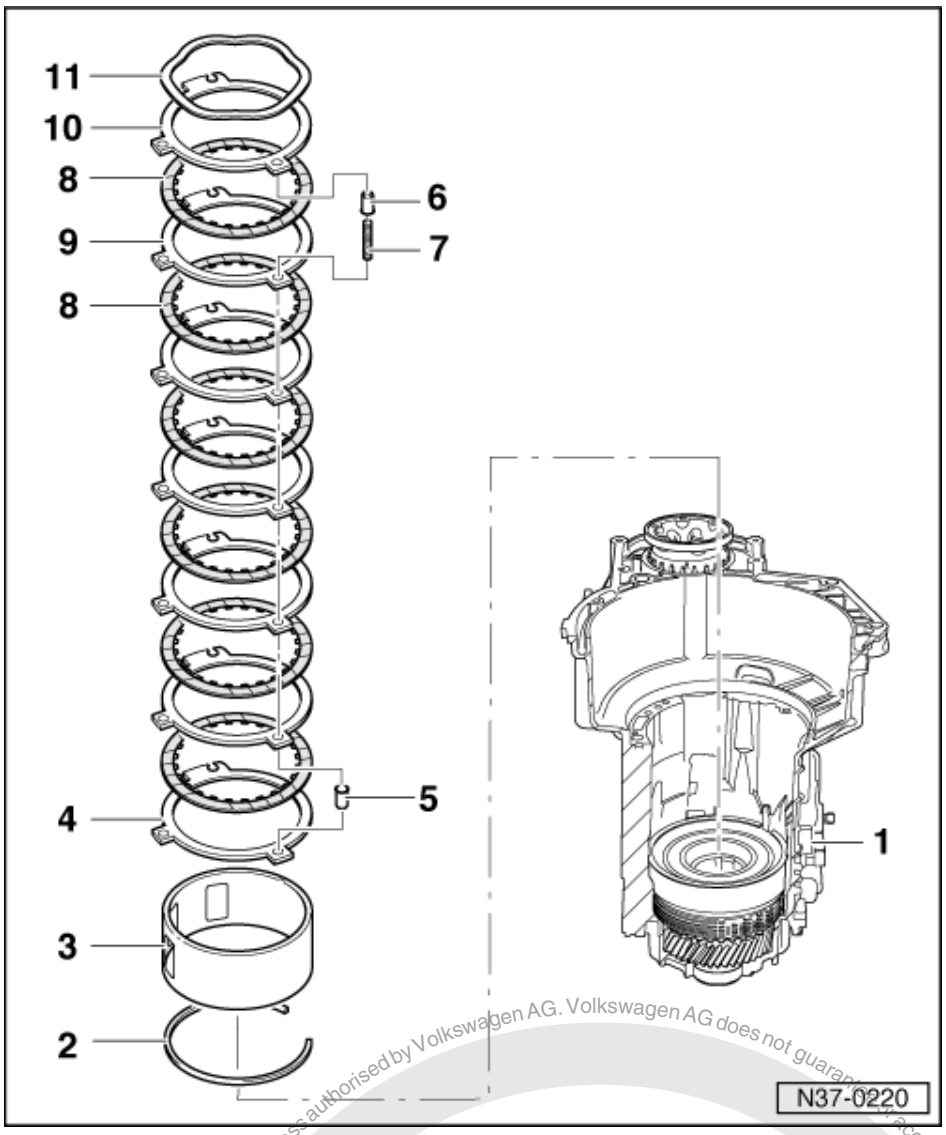

Adjusting 2nd and 4th gear brake -B2- for gearbox CKY

These adjustment instructions apply only to gearbox CKY.

Play of brake -B2- is determined by the thickness of the last outer plate(s).

- To adjust, install components without corrugated washer (item 11), without last outer plate (item 10) and without spring caps (item 6).

1 Gearbox housing
2 Circlip
- For supporting tube

3 Supporting tube -B2-
- Spare part is allocated according to gearbox code letters
- Insert so that notch locates on freewheel wedge

Protected by copyright. Copying for private or commercial purposes, in part or in whole, is not permitted unless authorised by Volkswagen AG. Volkswagen AG does not guarantee or accept any liability with respect to the correctness of information in this document. Copyright by Volkswagen AG.
satelettronica

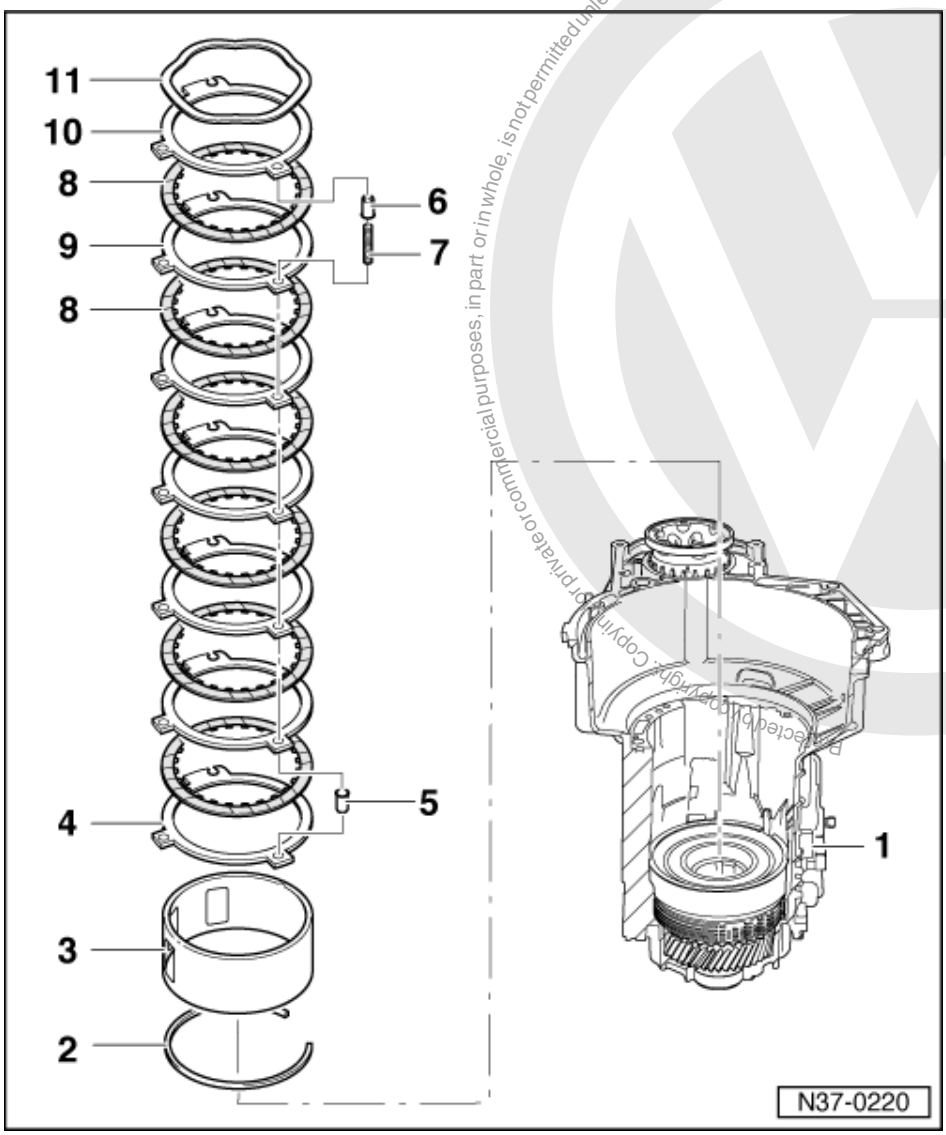

4 Outer plate -B2-
- 3 mm thick

5 Spring cap
- Install after installing first outer plate (item 4)

6 Spring cap
- Do not install when adjusting -B2-
- Install before installing last outer plate

7 Spring
- Spare part is allocated according to gearbox code letters

8 Inner plate -B2-
- Quantity => from Page 3
- Spare part is allocated according to gearbox code letters

Protected by copyright. Copying for private or commercial purposes, in part or in whole, is not permitted unless authorised by Volkswagen AG. Volkswagen AG does not guarantee or accept any liability with respect to the correctness of information in this document. Copyright by Volkswagen AG.
satelettronica

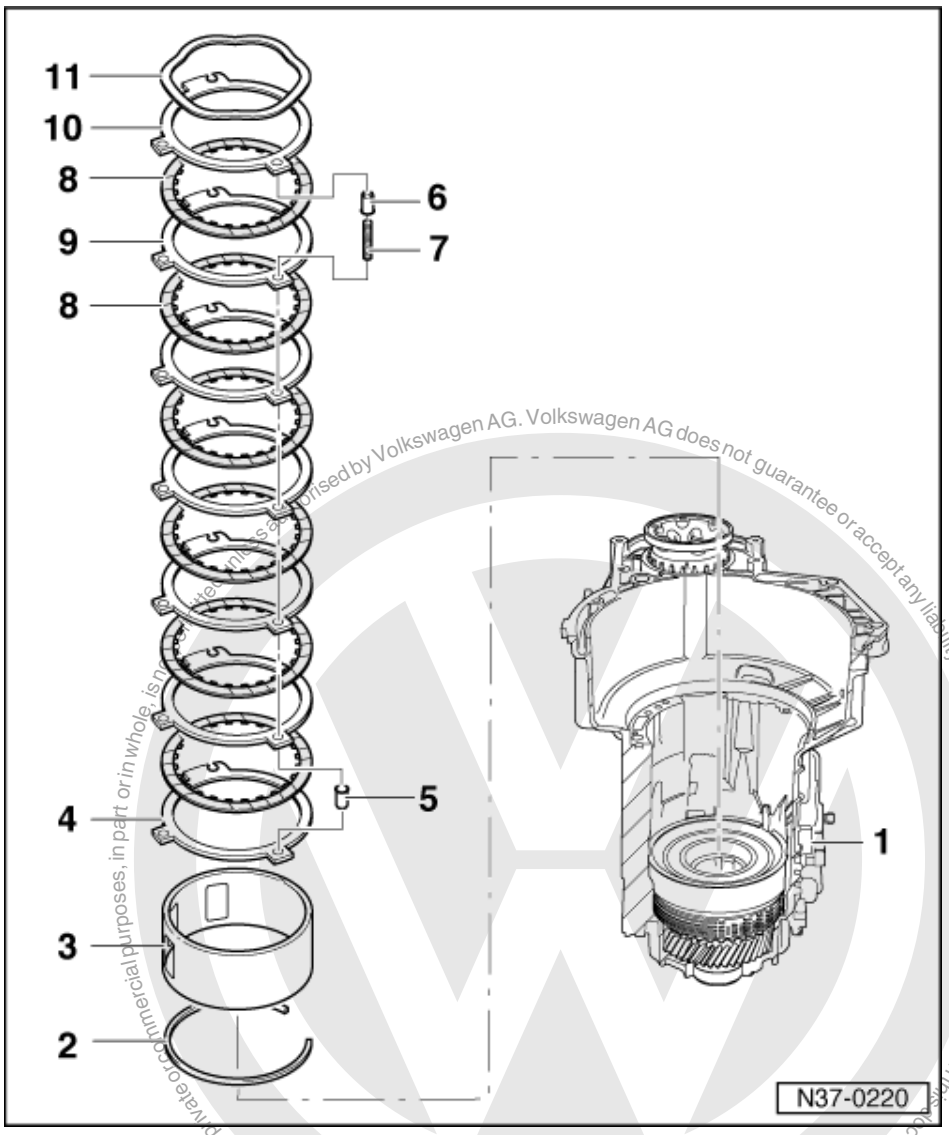

9 Outer plate -B2-
- Always install 2 mm thick outer plates
- Quantity => from Page 3

10 Outer plate -B2-
- Do not install when adjusting -B2-
- To adjust; 2 outer plates can be installed.

11 Corrugated washer
- Do not install when adjusting -B2-

Calculating thickness of last outer plate -D-

The thickness of the last outer plate(s) is determined by gap "x". For this the formula

satelettronica

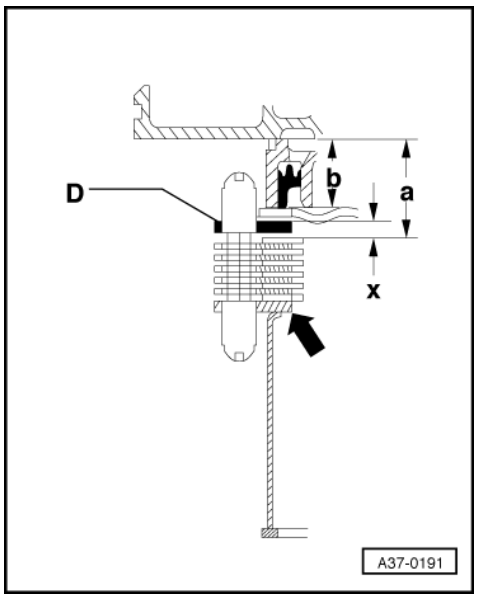

-> Gap x = a - b - 3.6 mm

must be used. The illustration shows the assembled brake -B2- in the gearbox. Special tool 3459, which exerts a force on the pack of plates, is not illustrated.

Determining dimension b => Page 163 .

3.6 mm - This amount allows for the settling caused by the force exerted by special tool 3459.

First outer plate -arrow- is always 3 mm thick.

Calculating "a":

Assemble planetary gearbox up to the last inner plate of -B2-, Page 107 . The last outer plate, the last 3 spring caps and the corrugated spring washer are not installed.

- Place 3459 onto the last inner plate and turn so that the 3 clips align with the 3 holes for the ATF pump.
- Bolt 3459 to flange for ATF pump with 5 Nm.

The plate packet for -B2- is now pressed together for the measurements.

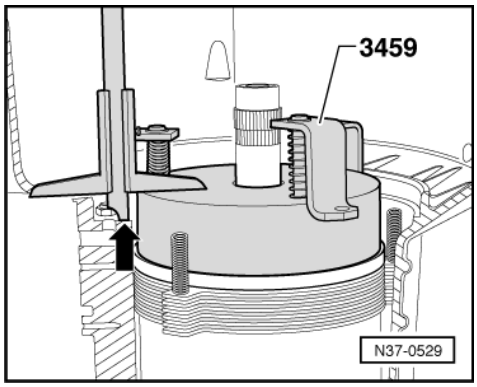

- -> Measure from pump flange/gearbox housing -arrow- to 3459 with depth gauge.

Dimension a = Height of 3459 in mm - measured value

Example:

Height of 3459	= 60.0 mm

Protected by copyright. Copying for private or commercial purposes, in part or in whole, is not permitted unless authorised by Volkswagen AG. Volkswagen AG does not guarantee or accept any liability with respect to the correctness of information in this document. Copyright by Volkswagen AG.
satelettronica

- Measured value	=	- 29.8 mm
Calculated value a	=	30.2 mm

- Note calculated value a.
- Remove 3459.

Calculating dimension"b":

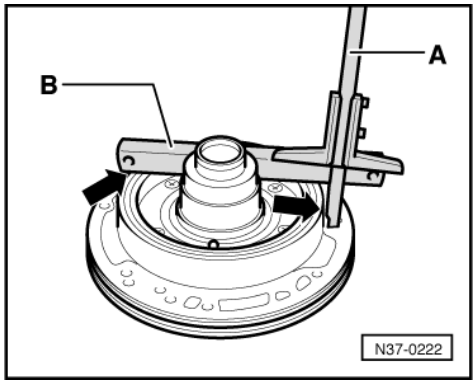

- Push piston into ATF pump onto stop.
- Place new paper gasket onto ATF pump.
- -> Place straightedge "B" onto stator support (arrow) and measure with depth gauge "A" to gasket of pump flange.

Example:

Reading	=	40.1 mm
- Straightedge	=	- 19.5 mm
Calculated size b	=	20.6 mm

- Note calculated value b.

Gap x = a - b - 3.6 mm

Gap x = 30.2 - 20.6 - 3.6 mm = 6.0 mm

- Determine thickness of outer plate(s) according to table:

Table of plates:

Gap "x" (mm)	Plate (mm)
4.25 ... 4.49	2.75
4.50 ... 4.74	3.00
4.75 ... 4.99	3.25
5.00 ... 5.24	3.50
5.25 ... 5.49	3.75
5.50 ... 5.74	2.00 + 2.00
5.75 ... 5.99	2.00 + 2.25
6.00 ... 6.24	2.25 + 2.25
6.25 ... 6.49	2.25 + 2.50
6.50 ... 6.74	2.50 + 2.50
6.75 ... 7.00	2.50 + 2.75

- Ascertain thickness of outer plate(s) according to table and determine Part No. from parts catalogue.

  In this example two outer plates must be installed (each 2.25mm thick).

- Fit three spring caps onto pressure springs.
- Insert final, determined, outer plate(s).
- Install corrugated washer

Protected by copyright. Copying for private or commercial purposes, in part or in whole, is not permitted unless authorised by Volkswagen AG. Volkswagen AG does not guarantee or accept any liability with respect to the correctness of information in this document. Copyright by Volkswagen AG.
satelettronica

- Further installation instructions are described => from page 118 .

Protected by copyright. Copying for private or commercial purposes, in part or in whole, is not permitted unless authorised by Volkswagen AG. Volkswagen AG does not guarantee or accept any liability with respect to the correctness of information in this document. Copyright by Volkswagen AG.

satelettronica

38 - Gears, Hydraulic controls

1 - Dismantling and assembling ATF pump

1.1 - Dismantling and assembling ATF pump

Special tools, workshop equipment, testers, measuring instruments and auxiliary items required

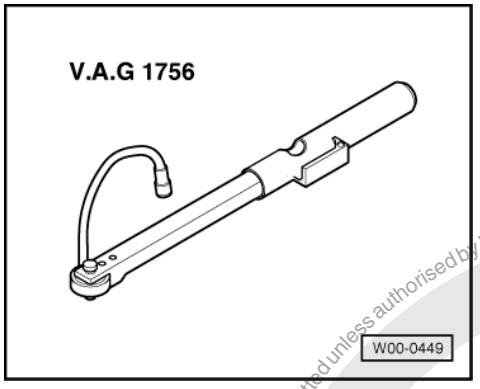

- V.A.G 1756 Angle wrench

Protected by copyright. Copying for private or commercial purposes, in part or in whole, is not permitted unless authorised by Volkswagen AG. Volkswagen AG does not guarantee or accept any liability with respect to the correctness of information in this document. Copyright by Volkswagen AG.
satelettronica

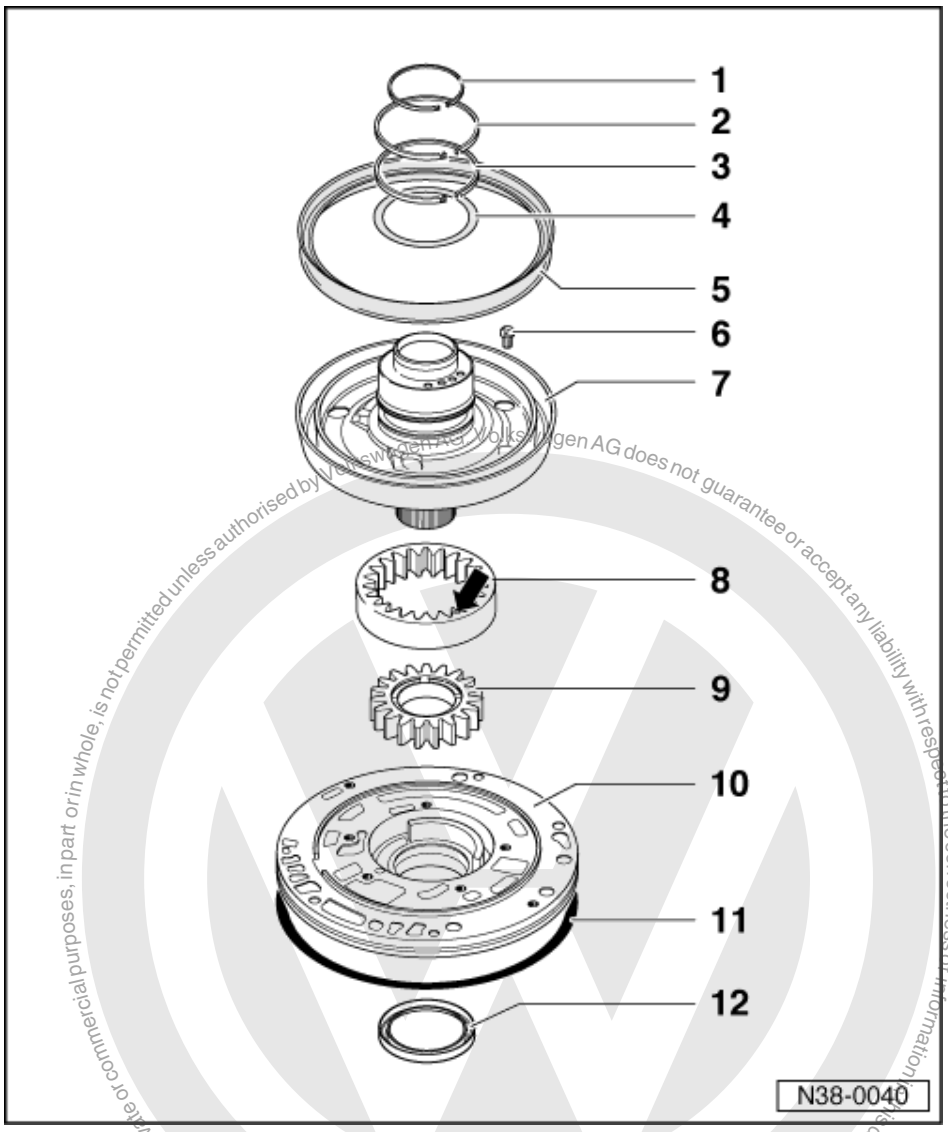

- Observe general repair instructions=> page 13 .

Replacement ATF pump parts and the ATF pump are allocated according to gearbox code.

1 Piston ring
- Check that it is correctly located =>Fig. 1
- Removing and installing => Fig. 2

2 Piston ring
- Check that it is correctly located =>Fig. 1
- Removing and installing => Fig. 2

3 Piston ring
- Check that it is correctly located =>Fig. 1
- Removing and installing => Fig. 2

4 Thrust washer

satelettronica

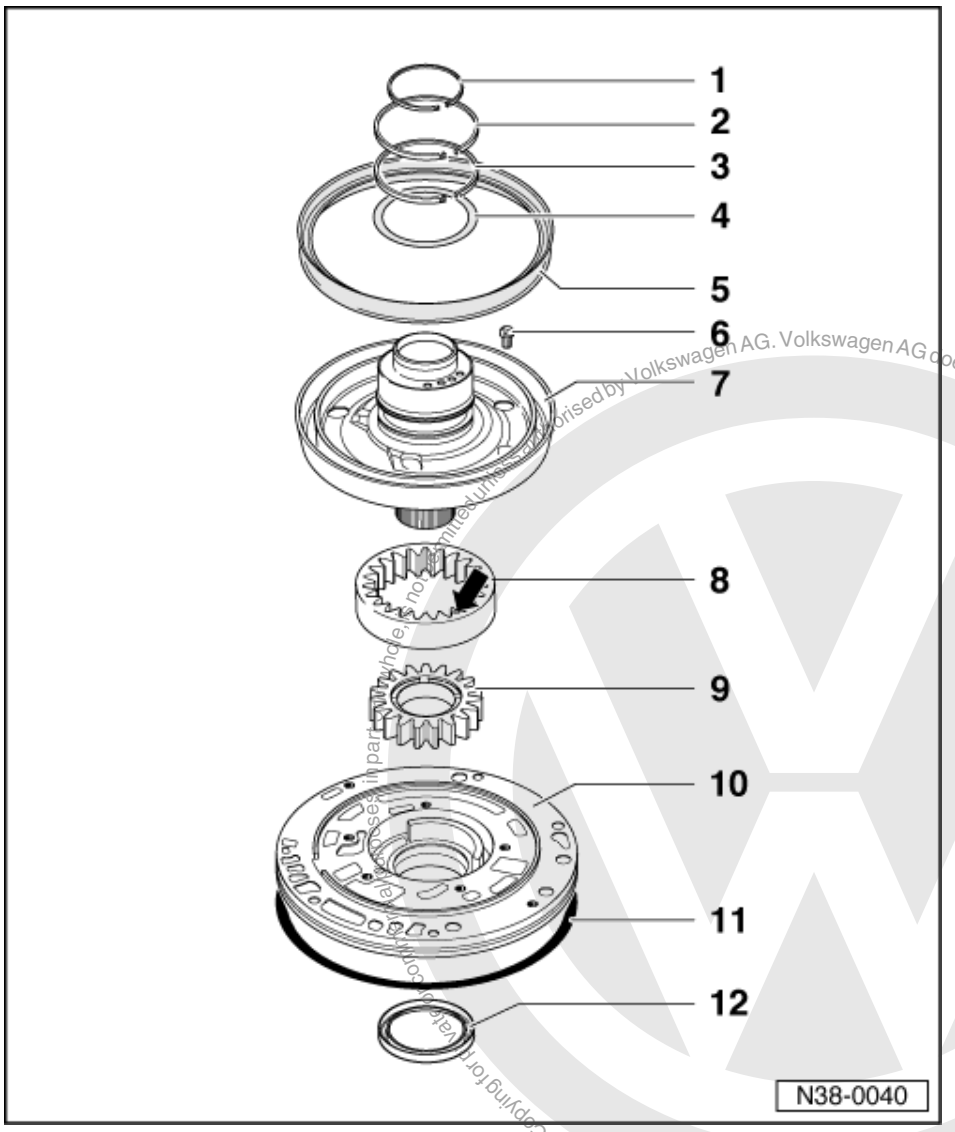

5 Piston
- Sealing lips are vulcanised to the piston
- To remove, carefully lever out of stator support at numerous points using screw driver
- Moisten sealing lips with ATF before inserting
- Turn piston slightly when installing

6 Bolt, 10 Nm + 45° (1/8 turn) further

7 Stator support

8 Outer gear
- Manufacturer's marking (arrow) faces stator support
- If outer gear is incorrectly installed, the ATF pump may not operate freely in the installed position

9 Inner gear
- Larger groove faces stator support

satelettronica

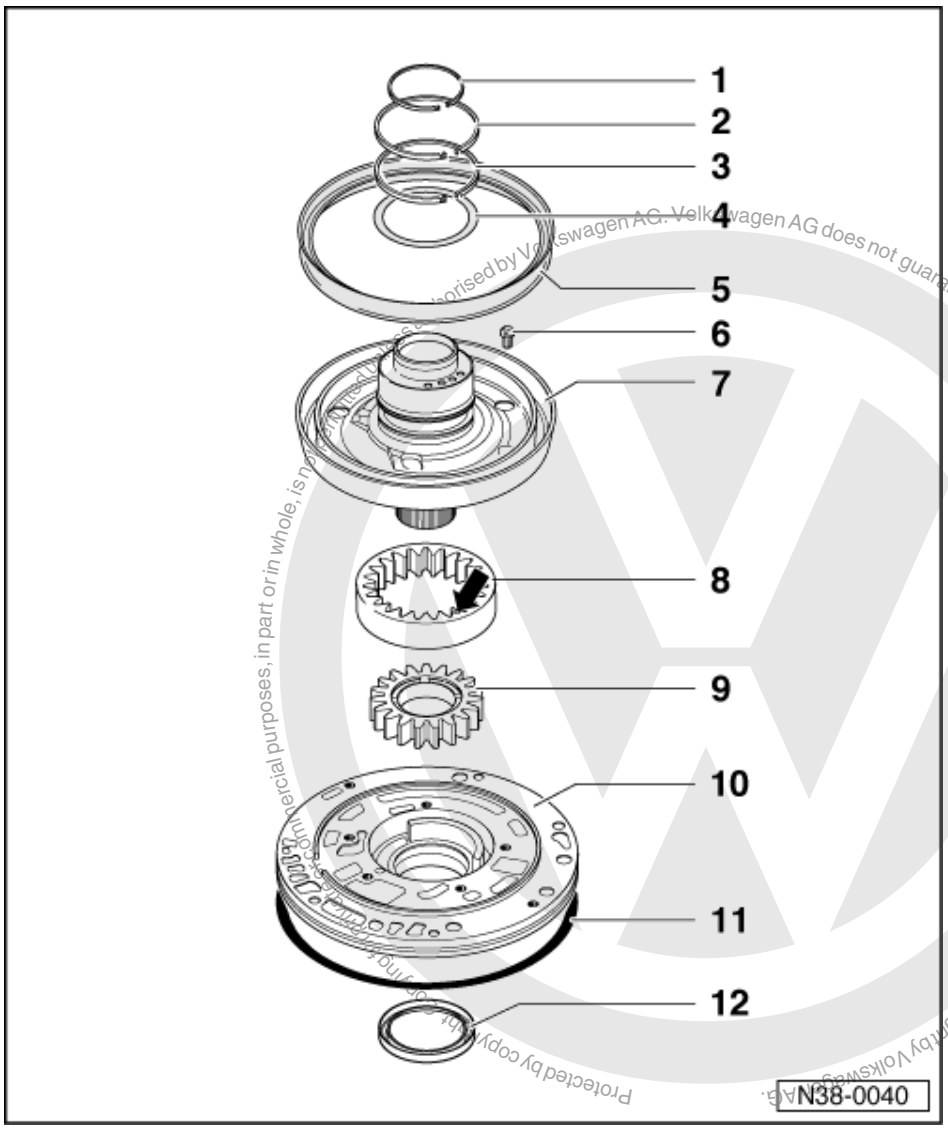

10 Housing for ATF pump

11 O-ring

- Always replace

12 Torque converter oil seal

- Removing and installing =>Page 19

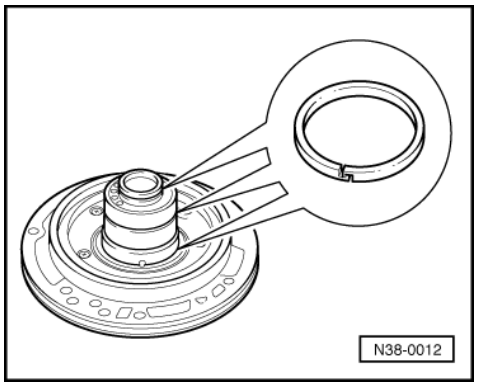

Protected by copyright. Copyright by Volkswagen AG. Volkswagen AG does not guarantee or accept any liability with respect to the correctness of information in this document.
satelettronica

-> Fig.1 Checking that the piston rings are correctly located

- Ensure that the ends of the piston rings are hooked together.

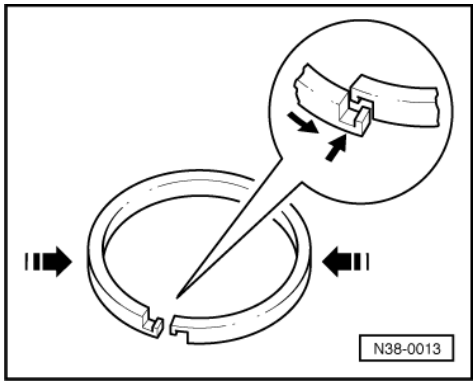

-> Fig.2 Removing and installing piston ring

Removing

- Press piston ring together and unhook by hand.
- Spread piston on both sides and remove. Do not pull out of groove from one side.

Installing

- Place piston ring in groove.
- To hook ends together press sides of ring in and guide ends over one another.

satelettronica

Protected by copyright. Copying for private or commercial purposes, in part or in whole, is not permitted unless authorised by Volkswagen AG. Volkswagen AG does not guarantee or accept any liability with respect to the correctness of information in this document. Copyright by Volkswagen AG.

2 - Dismantling and assembling freewheel with -B1- piston

2.1 - Dismantling and assembling freewheel with -B1- piston

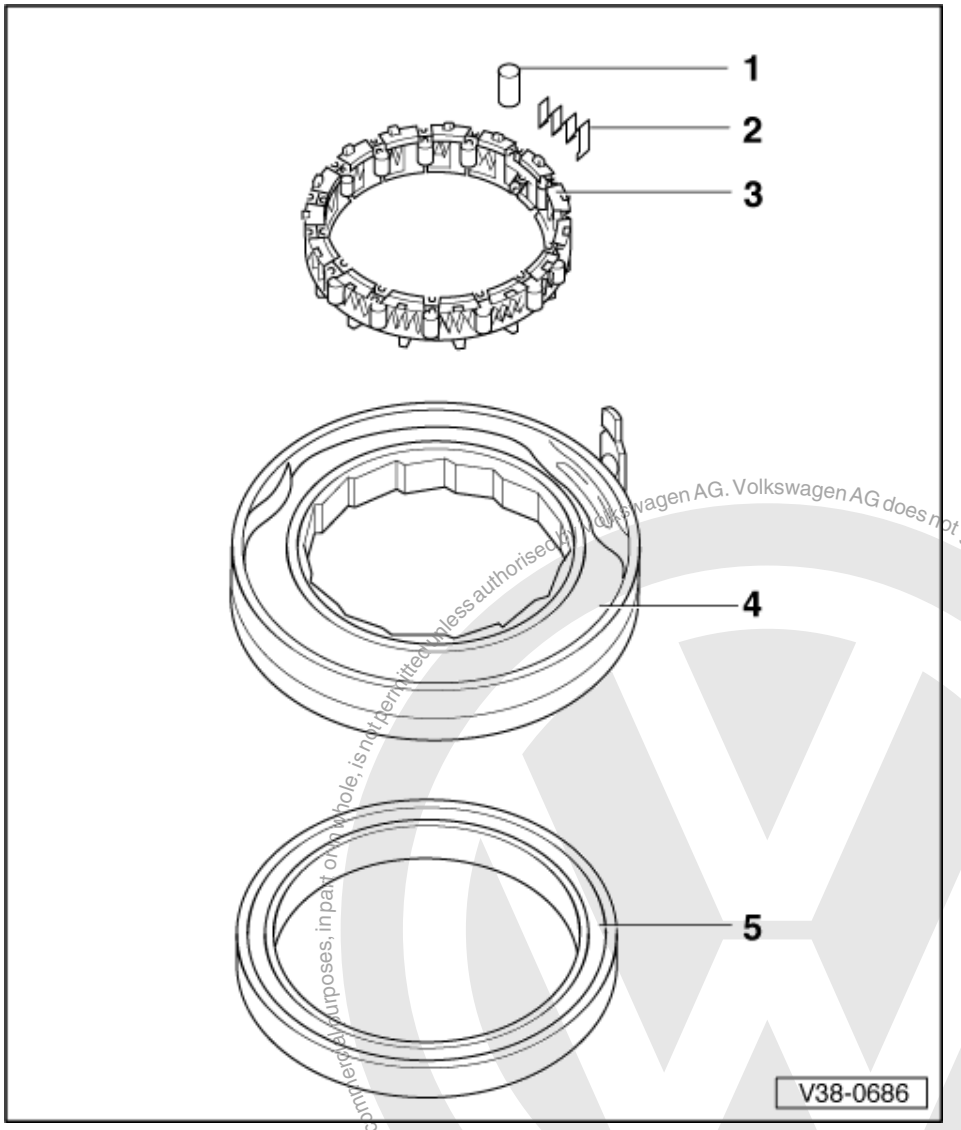

- Observe general repair instructions=> page 13 .

1 Rollers
- Installing => Fig. 2

2 Springs
- Installing => Fig. 2

3 Cage
- Removing and installing => Fig. 1
- Installation position => Fig. 3

4 Outer ring

5 Piston
- Sealing lips are vulcanised to the piston
- Moisten sealing lips with ATF before installing
- Turn piston slightly when installing
- Installed position => Fig. 4

Protected by copyright. Copying for private and commercial purposes, in part or in whole, is not permitted unless authorised by Volkswagen AG. Volkswagen AG does not guarantee or accept any liability with respect to the correctness of information in this document. Copyright by Volkswagen AG.
satelettronica

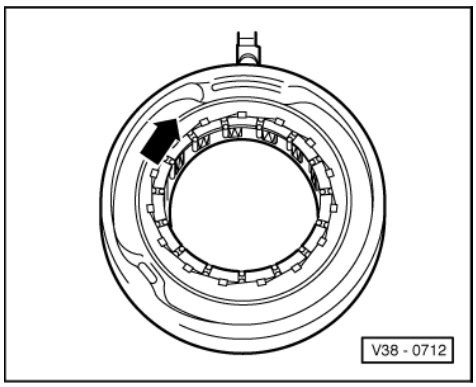

-> Fig.1 Removing and installing cage

Removing

- Turn cage to left onto stop.
- Press cage upwards out of outer ring.

Installing

- Insert cage in outer ring.
- Installation position => Fig. 3
- Secure cage by turning in direction of arrow as far as the stop.

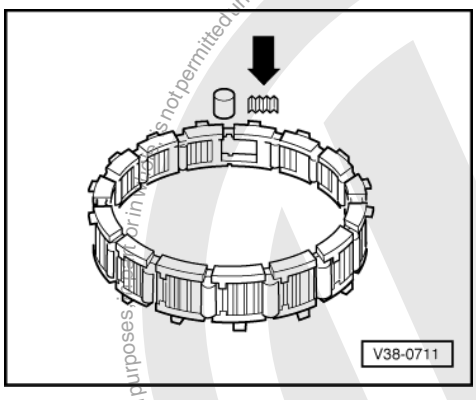

-> Fig.2 Installing rollers and springs

- Insert springs -arrow- so that the longer spring end engages in the cage.
- Then insert roller between cage and spring.

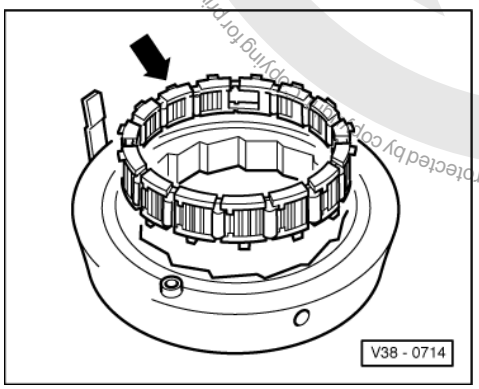

Protected by copyright. Copying for private or commercial purposes, in whole or in part, is not permitted unless authorised by Volkswagen AG. Volkswagen AG does not guarantee or accept any liability with respect to the correctness of information in this document. Copyright by Volkswagen AG.
satelettronica

-> Fig.3 Installation position of cage in outer ring

- Install with large lugs (arrow) facing up.

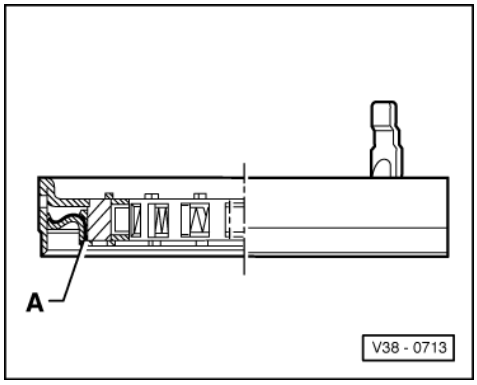

-> Fig.4 Installed position of piston

- Insert piston -A- as shown.

Protected by copyright. Copying for private or commercial purposes, in part or in whole, is not permitted unless authorised by Volkswagen AG. Volkswagen AG does not guarantee or accept any liability with respect to the correctness of information in this document. Copyright by Volkswagen AG.
satelettronica

3 - Dismantling and assembling 1st to 3rd gear clutch -K1-

3.1 - Dismantling and assembling 1st to 3rd gear clutch -K1-

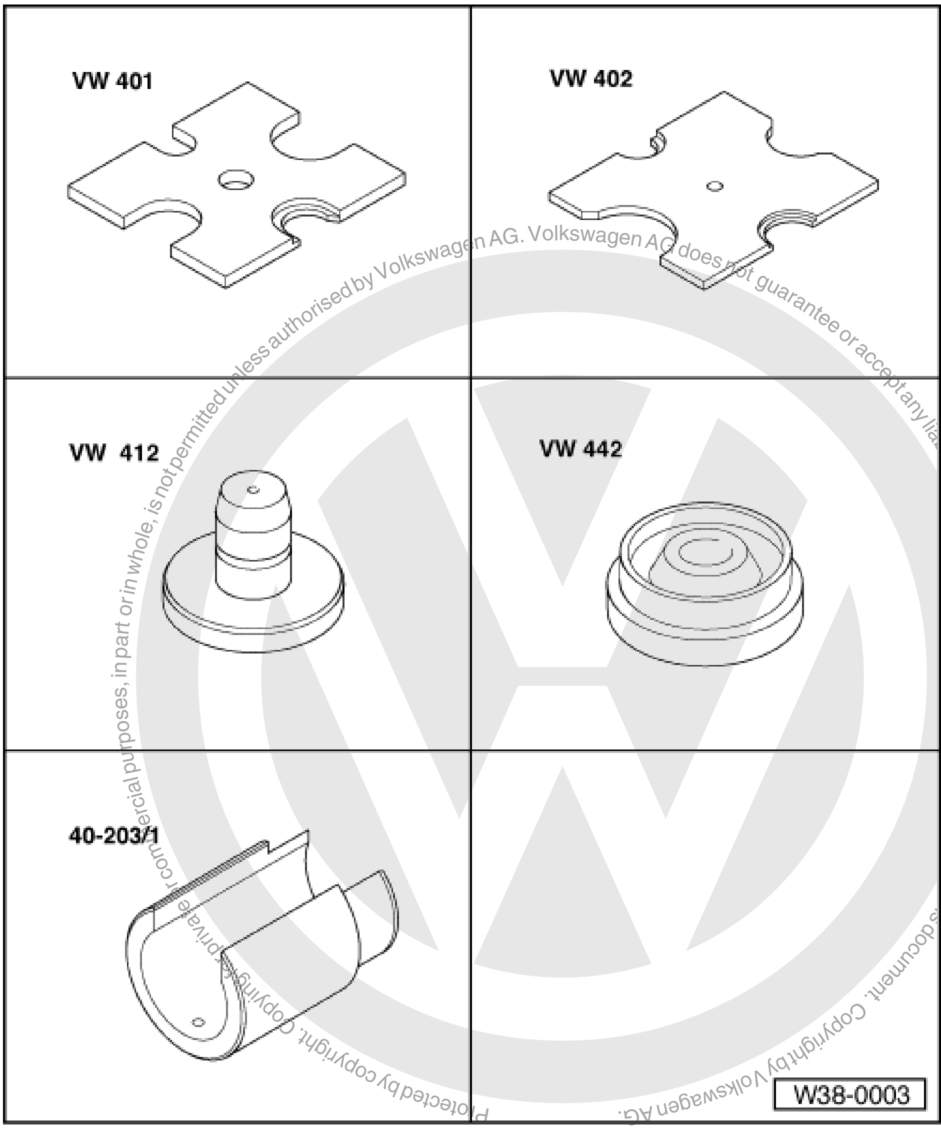

Protected by copyright. Copying for private or commercial purposes, in part or in whole, is not permitted unless authorised by Volkswagen AG. Volkswagen AG does not guarantee or accept any liability with respect to the correctness of information in this document. Copyright by Volkswagen AG.

- Observe general repair instructions=> page 13 .

Special tools, workshop equipment, test and measuring appliances and auxiliary items required

- VW 401 Thrust plate
- VW 402 Thrust plate
- VW 412 Press tool
- VW 442 Thrust pad
- 40-203/ 1 Tube, split

satelettronica

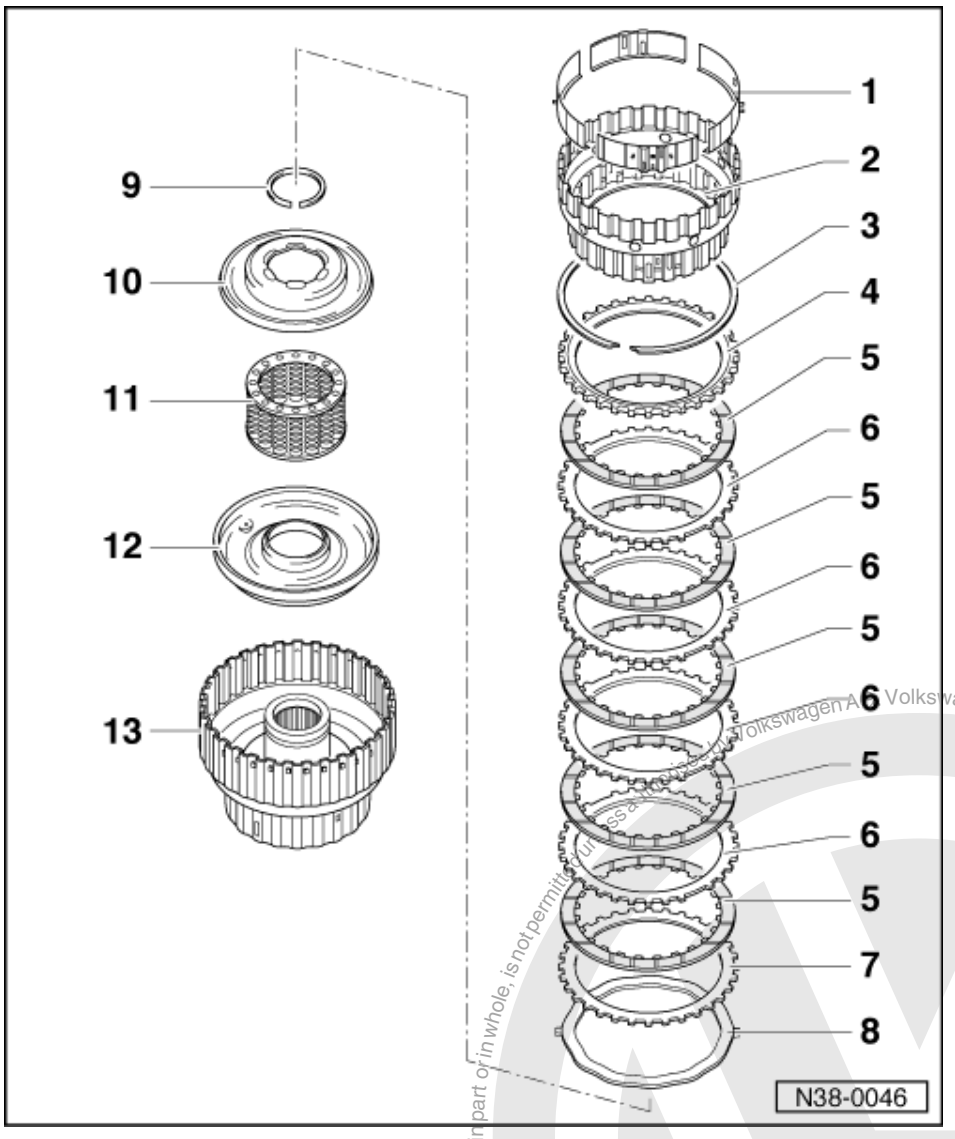

Clutch may be dismantled only for cleaning and visual inspection.

On some gearboxes the clutches -K1- and -K3- may be pressed together.

Pressing -K1- off -K3- => Page 103

Pressing -K1- onto -K3- => Page 104

1 **Supporting ring**
- 4-piece, unclip from inner plate carrier
- Inserting =>Fig. 2

2 **Inner plate carrier**
- Inserting =>Fig. 4
- Assembling =>Fig. 2

3 **Circlip**
- Different thicknesses
- Mark after removing and insert in same position

Volkswagen AG does not guarantee or accept any liability with respect to the correctness of information in this document. Copyright by Volkswagen AG.
Protected by copyright. Copying for private or commercial purposes, in part or in whole, is not permitted unless authorised by Volkswagen AG.
satelettronica

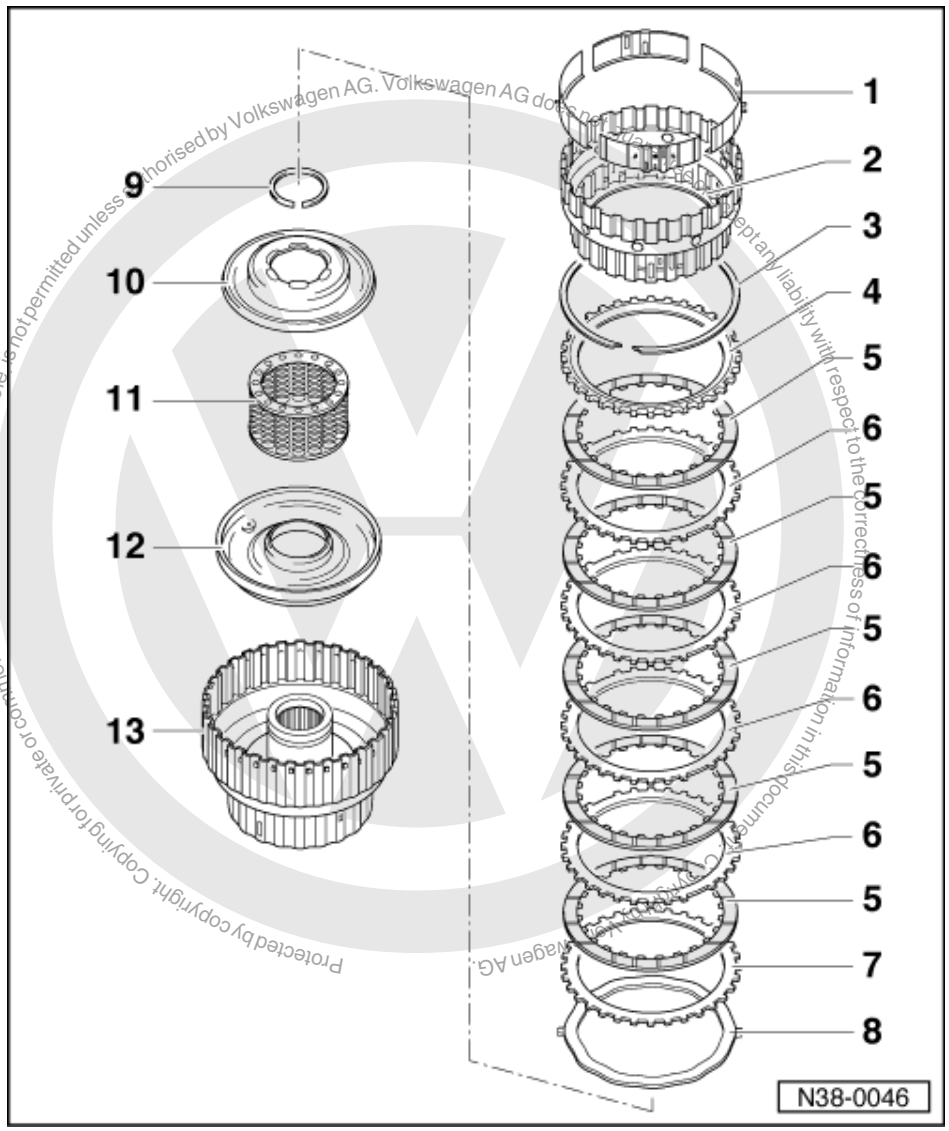

4 Thrust plate
- Smooth side faces inner plate
- Insert together with inner plate carrier => Fig. 2

5 Inner plate
- Quantity=> Page 3
- Installing=> Fig. 2
- Before installing place plates in ATF for 15 minutes

6 Outer plate
- Quantity=> Page 3
- Installing=> Fig. 2
- Always 1.5 mm thick

7 Outer plate
- Always 2 mm thick
- Installing=> Fig. 2

8 Corrugated washer

9 Circlip
- Removing and installing =>Fig. 1

satelettronica

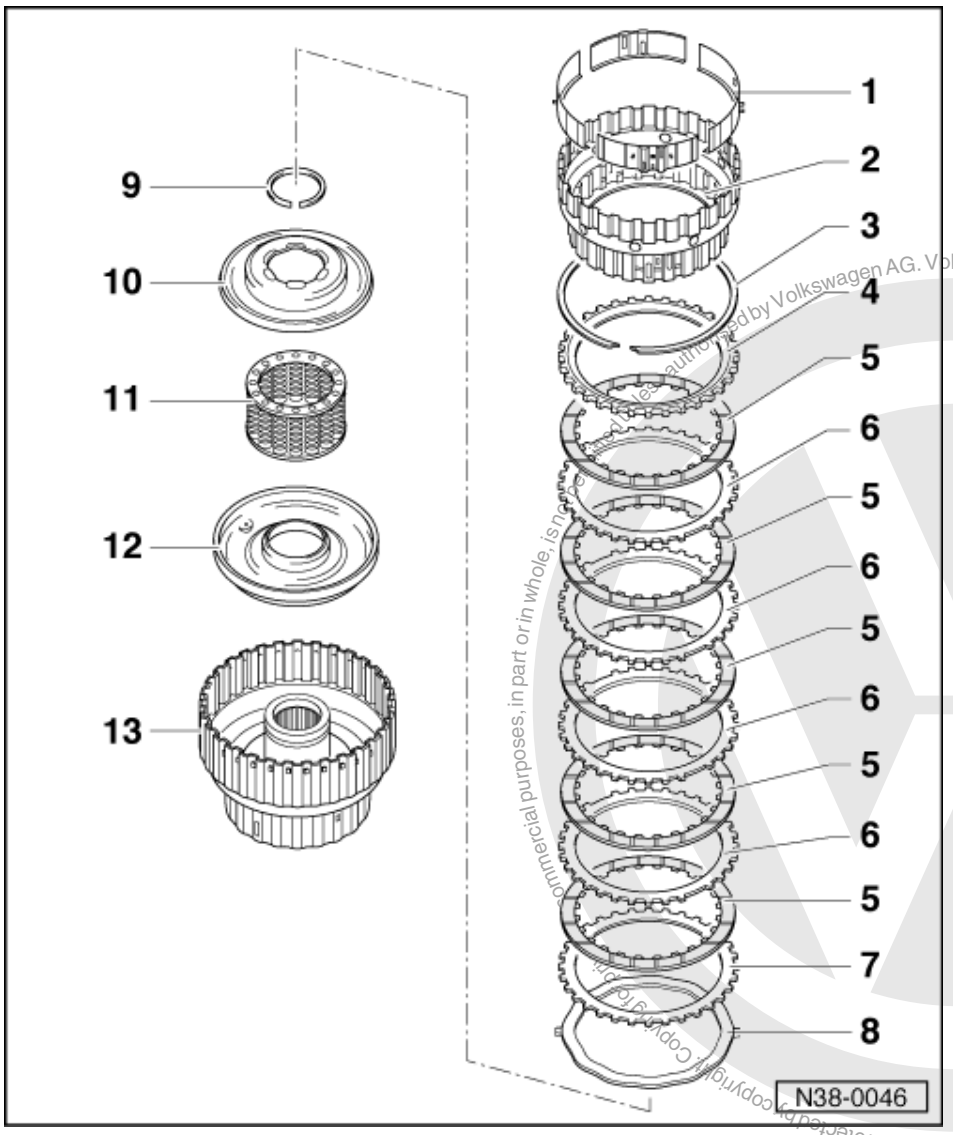

10 Piston cap

- Sealing lips are vulcanised to cap
- Moisten sealing lips with ATF before installing
- Turn cap slightly when installing

11 Intermediate spring ring

- With spring supporting shell and compression springs

12 Piston

- Sealing lips are vulcanised to piston
- To remove, carefully lever out of clutch housing at numerous points using screw driver
- Moisten sealing lips with ATF before installing
- Turn piston slightly when installing

13 Clutch housing

- Before inserting the inner plate carrier corrugated washer (item 8), insert inner and outer plates in the clutch =>Fig. 3

Protected by copyright. Copying for commercial purposes, in part or in whole, is not permitted without authorised by Volkswagen AG. Volkswagen AG does not guarantee or accept any liability with respect to the correctness of information in this document. Copyright by Volkswagen AG.
satelettronica

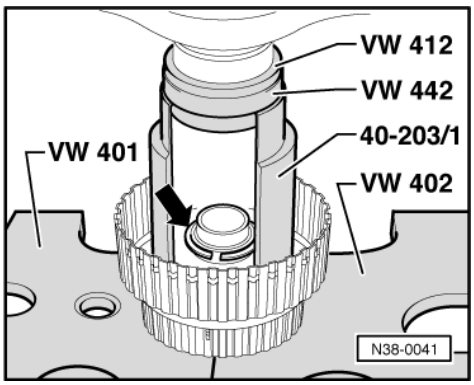

-> Fig.1 Removing and installing circlip

- Press piston cap with intermediate spring ring down far enough for the circlip (arrow) to be inserted in the groove.

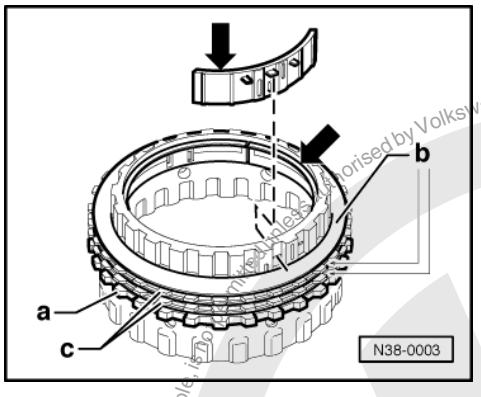

-> Fig.2 Fitting thrust plate and plates onto inner plate carrier

- Install thrust plate -a- with smooth side facing inner plate and stepped side towards inner plate carrier.
- Install 3 inner plates -b- and 2 outer plates -c-.
- Clip in supporting ring with step (arrow).

◆ Properly engage locking lugs.
◆ Insert corrugated washer and further plates in clutch housing => fig. 3 .

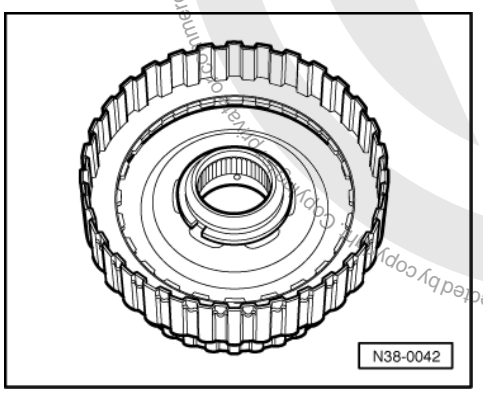

-> Fig.3 Installing corrugated washer and inner and outer plates in clutch housing

- First insert corrugated washer.
- Insert 2 mm thick outer plate.

Protected by copyright. Copyright by Volkswagen AG.
Copyright by Volkswagen AG. Volkswagen AG does not guarantee or accept any liability with respect to the correctness of information in this document.
satelettronica

- Insert remaining inner and outer plates.

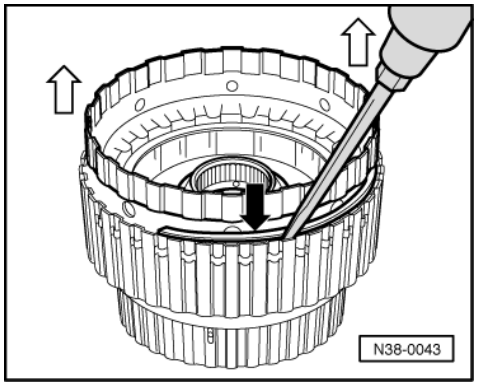

-> Fig.4 Inserting inner plate carrier and installing circlip (arrow).

- Lift inner plate carrier slightly to install circlip (arrows).

satelettronica

Protected by copyright. Copying for private or commercial purposes, in part or in whole, is not permitted unless authorised by Volkswagen AG. Volkswagen AG does not guarantee or accept any liability with respect to the correctness of information in this document. Copyright by Volkswagen AG.

4 - Dismantling and assembling reverse gear clutch -K2-

4.1 - Dismantling and assembling reverse gear clutch -K2-

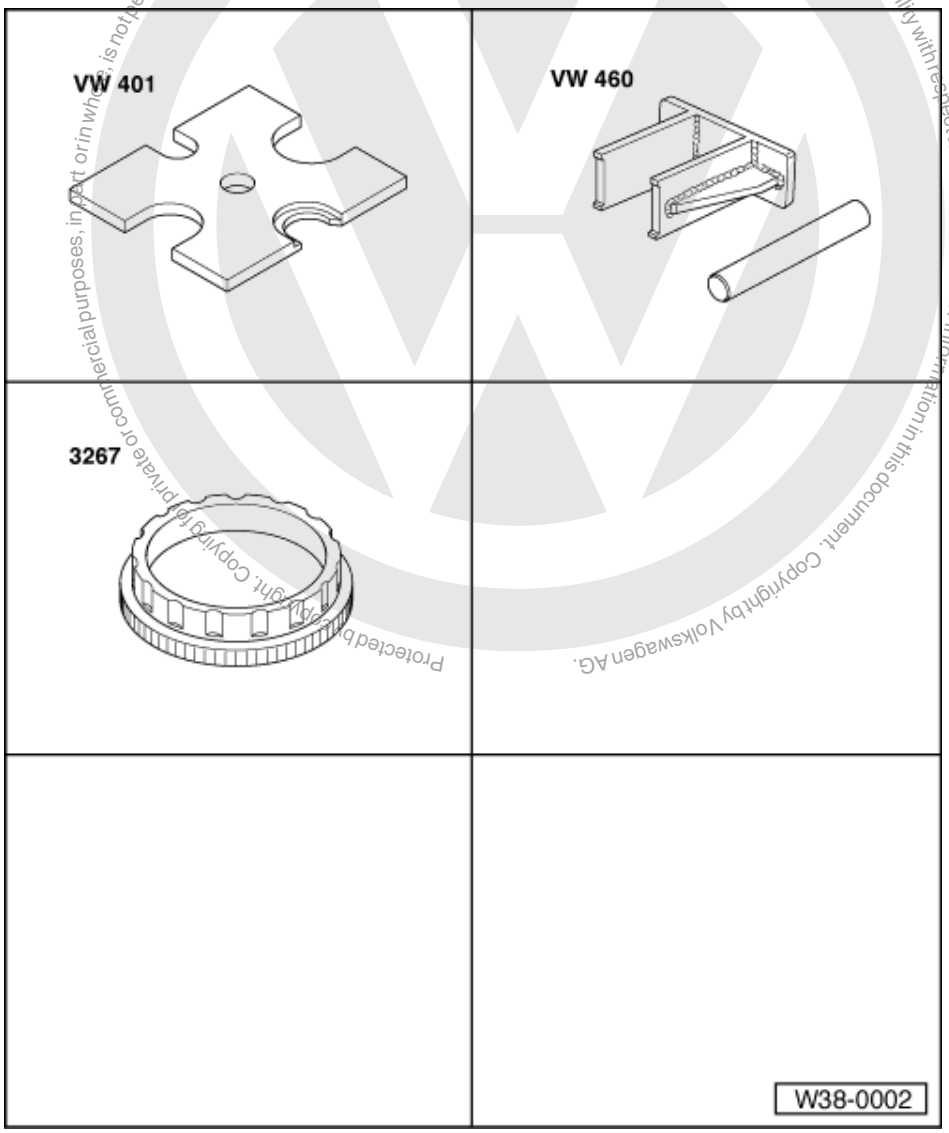

- Observe general repair instructions=> page 13 .

Special tools, workshop equipment, test and measuring appliances and auxiliary items required

- VW 401 Thrust plate
- VW 460 Removal device
- 3267 Assembly ring

satelettronica

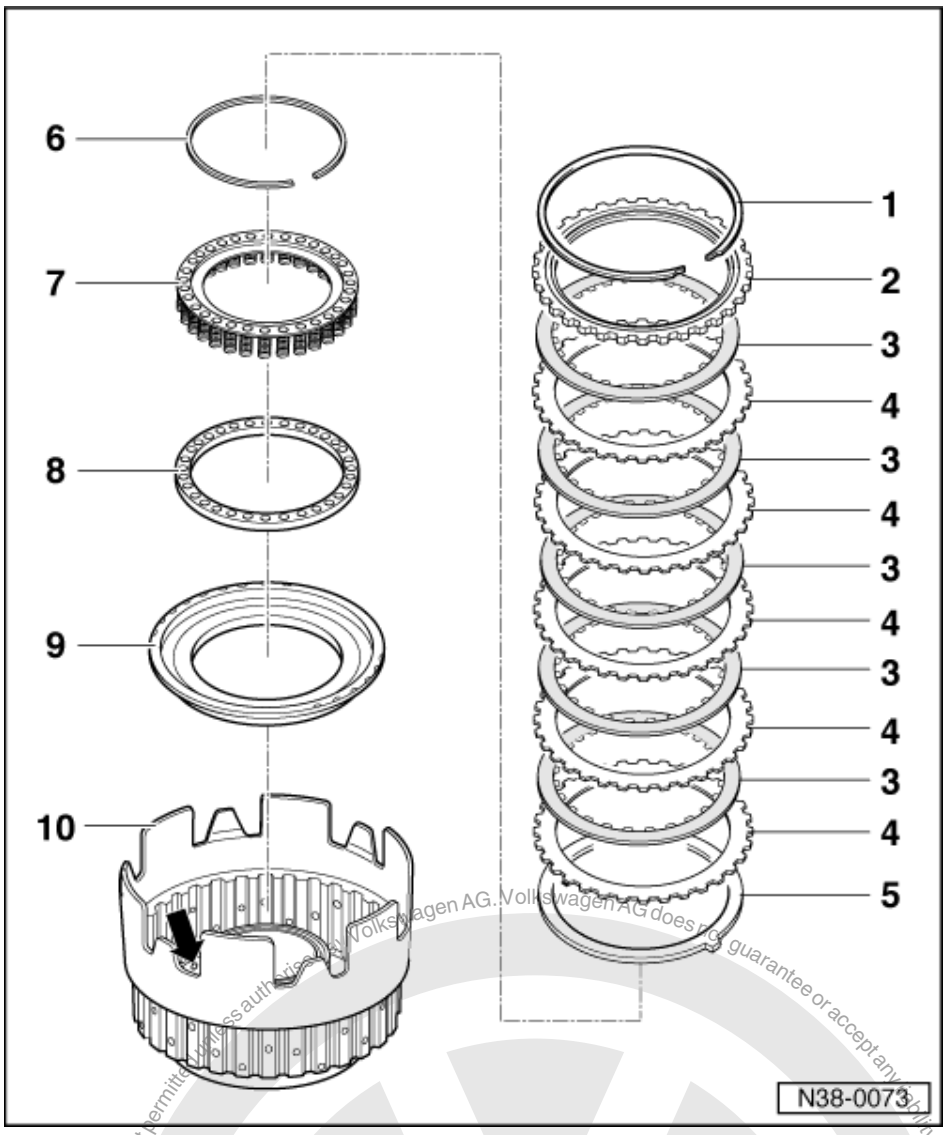

Clutch may be dismantled only for cleaning and visual inspection.

Do not damage ball valve (arrow) while dismantling.

1 Circlip
- Mark after removing and insert in same position
- Different thicknesses

2 Thrust plate
- Smooth side facing inner plates
- Different thicknesses

3 Inner plate
- Quantity=> Page 3
- Before installing place plates in ATF for 15 minutes

4 Outer plate
- Quantity=> Page 3

Protected by copyright. Copyright by Volkswagen AG.
Copyright by Volkswagen AG. Volkswagen AG does not guarantee or accept any liability with respect to the correctness of information in this document.
satelettronica

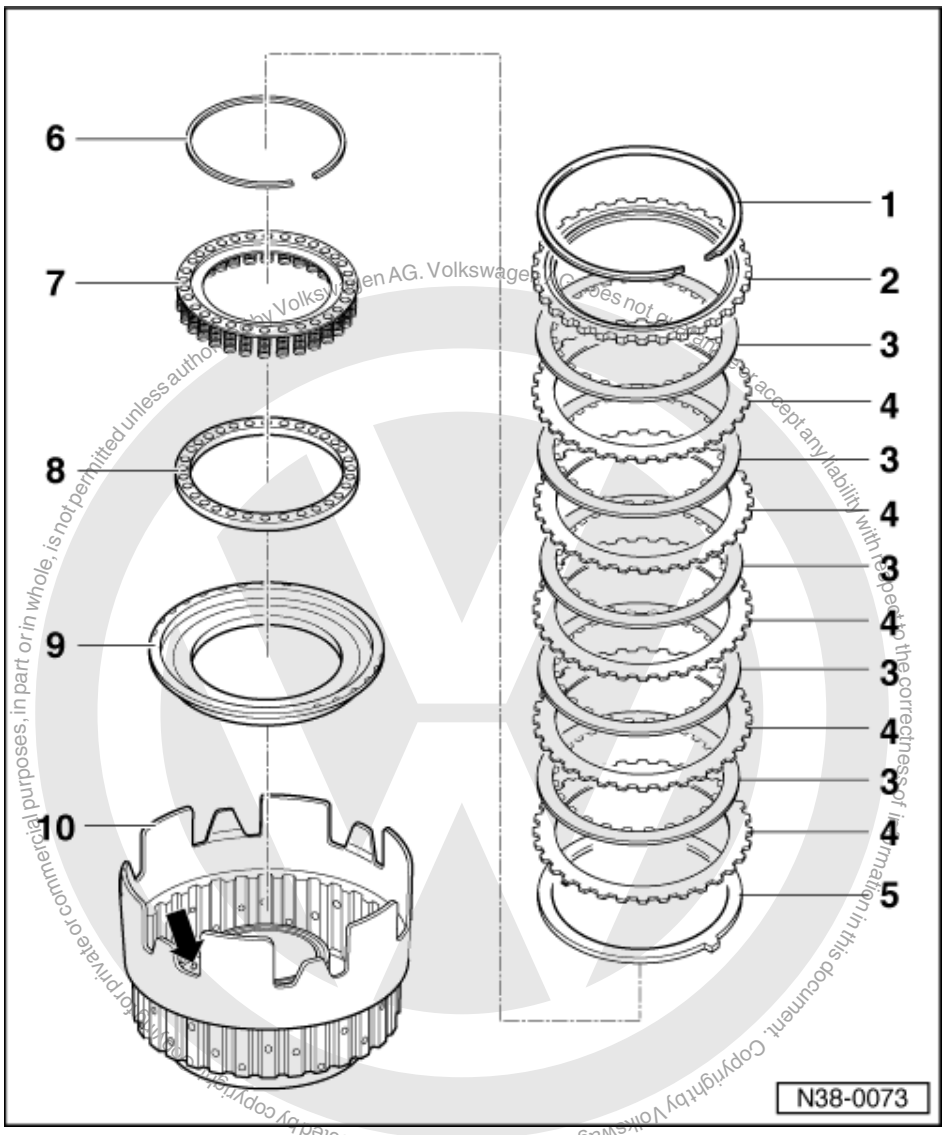

5 Corrugated washer
6 Circlip
- Removing and installing => Fig. 1
- Installation position => Fig. 2

7 Spring supporting plate
- With springs
- Installation position => Fig. 2

8 Spring supporting ring
9 Piston
- Sealing lips are vulcanised to piston
- To remove, carefully lever out of clutch housing at numerous points using screw driver
- Moisten sealing lips with ATF before installing
- Turn piston slightly when installing

10 Clutch housing

satelettronica

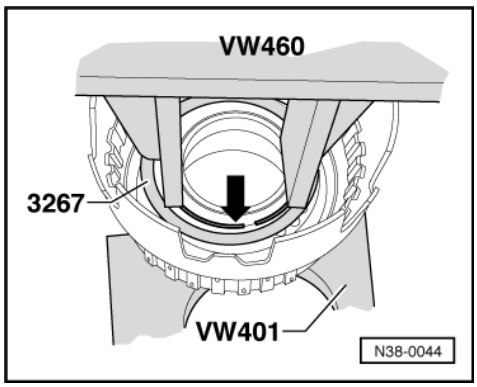

-> Fig.1 Removing and installing circlip (arrow)

- Press spring supporting plate down with 3267 just sufficient to be able to remove and install the circlip.
- Do not damage clutch housing ball valve.

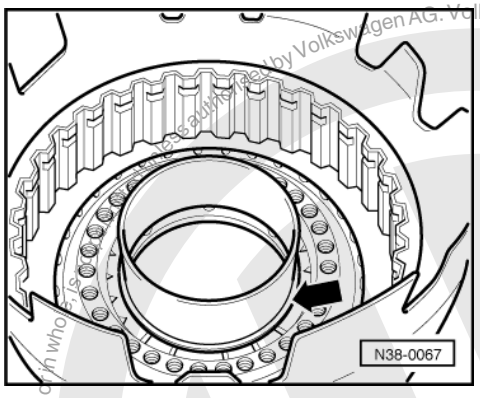

-> Fig.2 Installation position of spring supporting plate, checking circlip

Circlip (arrow) must be seated in the groove of clutch housing. Spring supporting plate must be centred relative to hub.

Protected by copyright. Copying for private or commercial purposes, in part or in whole, is not permitted unless authorised by Volkswagen AG. Volkswagen AG does not guarantee or accept any liability with respect to the correctness of information in this document. Copyright by Volkswagen AG.
satelettronica

5 - Dismantling and assembling 3rd and 4th gear clutch -K3- with turbine shaft

5.1 - Dismantling and assembling 3rd and 4th gear clutch -K3- with turbine shaft

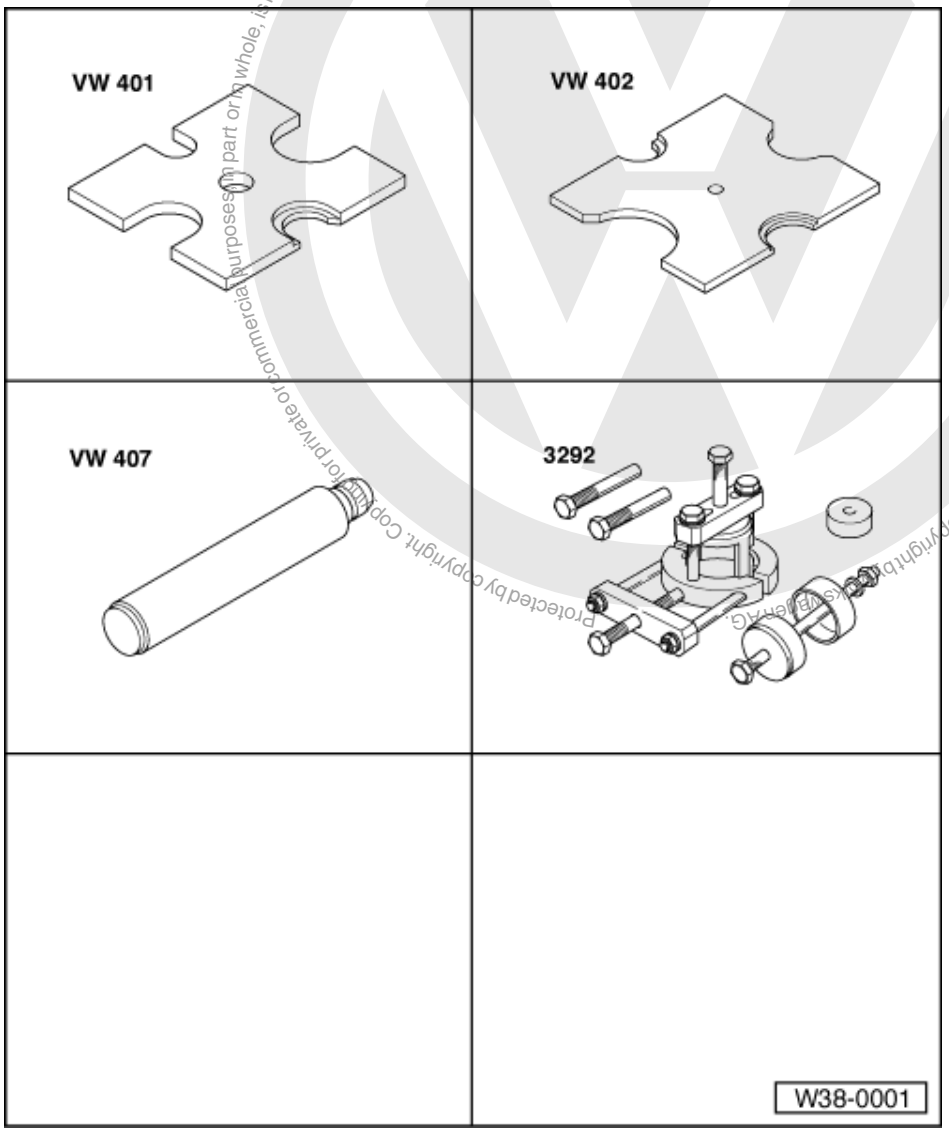

- Observe general repair instructions=> page 13 .

Special tools, workshop equipment, test and measuring appliances and auxiliary items required

- VW 401 Thrust plate
- VW 402 Thrust plate
- VW 407 Press tool
- 3292/1 From assembly tool 3292

Protected by copyright. Copyright by Volkswagen AG. Volkswagen AG does not guarantee or accept any liability with respect to the correctness of information in this document. Copyright by Volkswagen AG. Reproduction for private or commercial purposes in part or in whole, is not permitted unless authorised by Volkswagen AG.
satelettronica

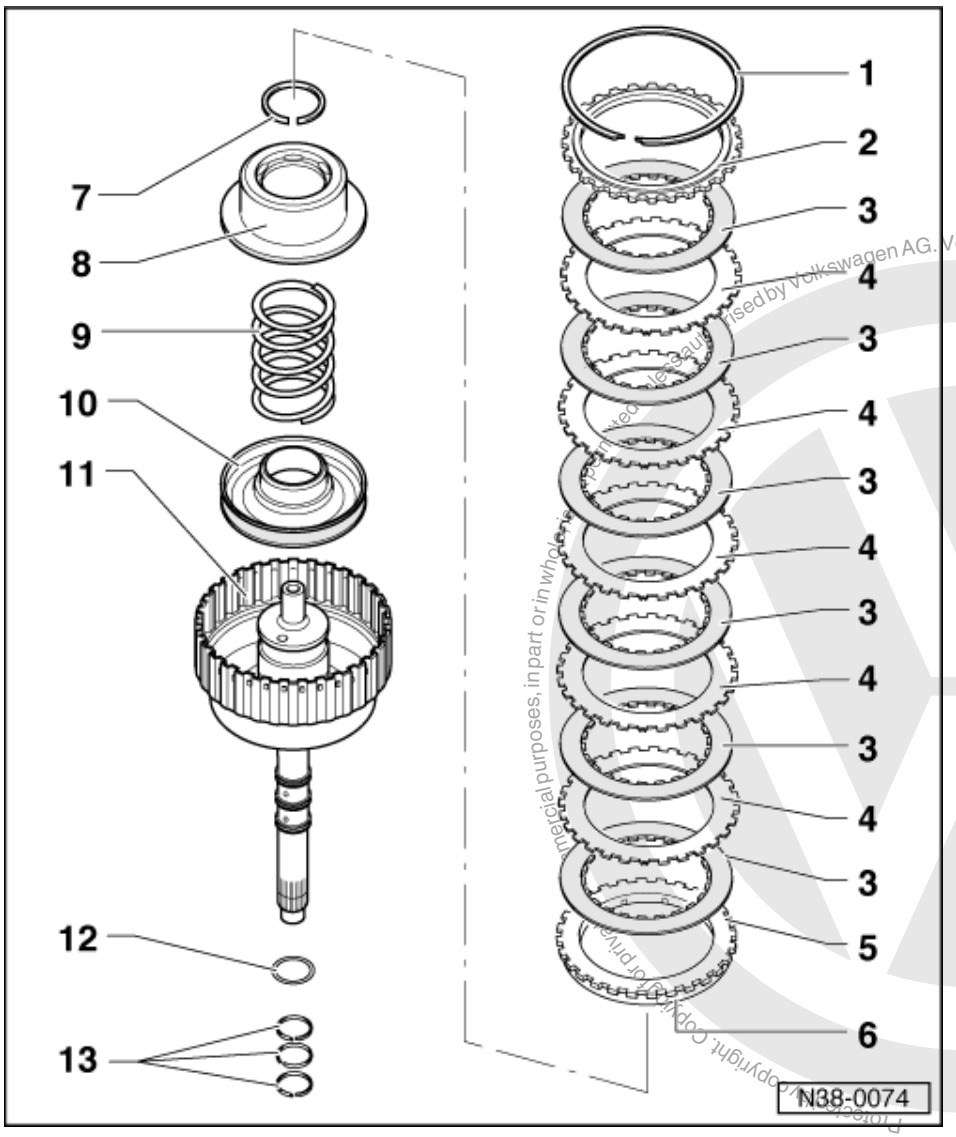

Clutch may be dismantled only for cleaning and visual inspection.

On some gearboxes the clutches -K1- and -K3- may be pressed together.

Pressing -K1- off -K3- => Page 103

Pressing -K1- onto -K3- => Page 104

1 **Circlip**
- Different thickness
- Mark after removing and insert at same point

2 **Thrust plate**
- Install with stepped side facing circlip

3 **Inner plate**
- Quantity=>Page 3

Protected by copyright. Copying for private or commercial purposes, in part or in whole, is not permitted unless authorised by Volkswagen AG. Volkswagen AG does not guarantee or accept any liability with respect to the correctness of information in this document. Copyright by Volkswagen AG.
satelettronica

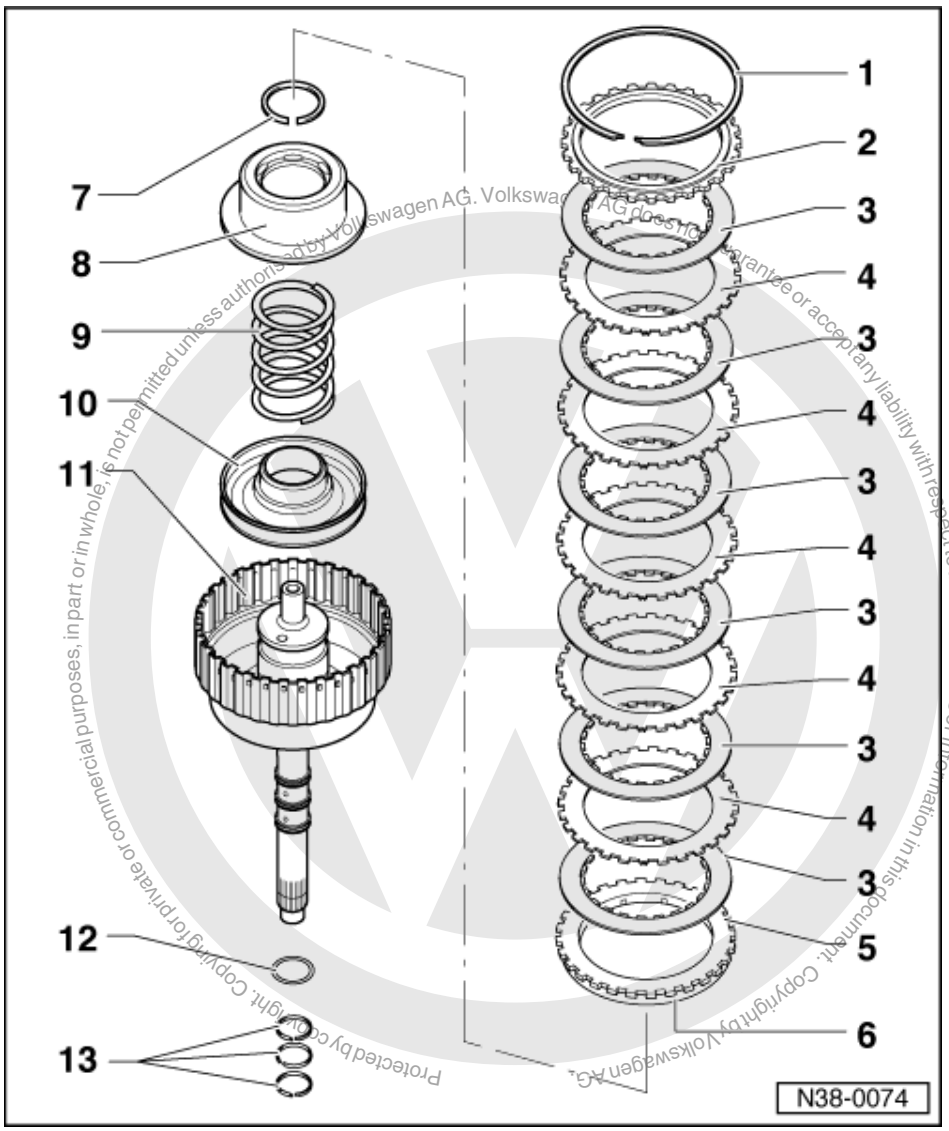

4 Outer plate
- Quantity=>Page 3

5 Pressure plate
- Install with peened corrugated washer facing piston

6 Corrugated washer
- Peened to pressure plate (item 5)

7 Securing ring
- Removing and installing => Fig. 1
- Different thickness
- Mark after removing and insert at same point

8 Piston cap
- Sealing lips are vulcanised to piston cap
- Moisten with ATF before installing
- Turn piston cap slightly when installing
- Removing and installing => Fig. 1

satelettronica

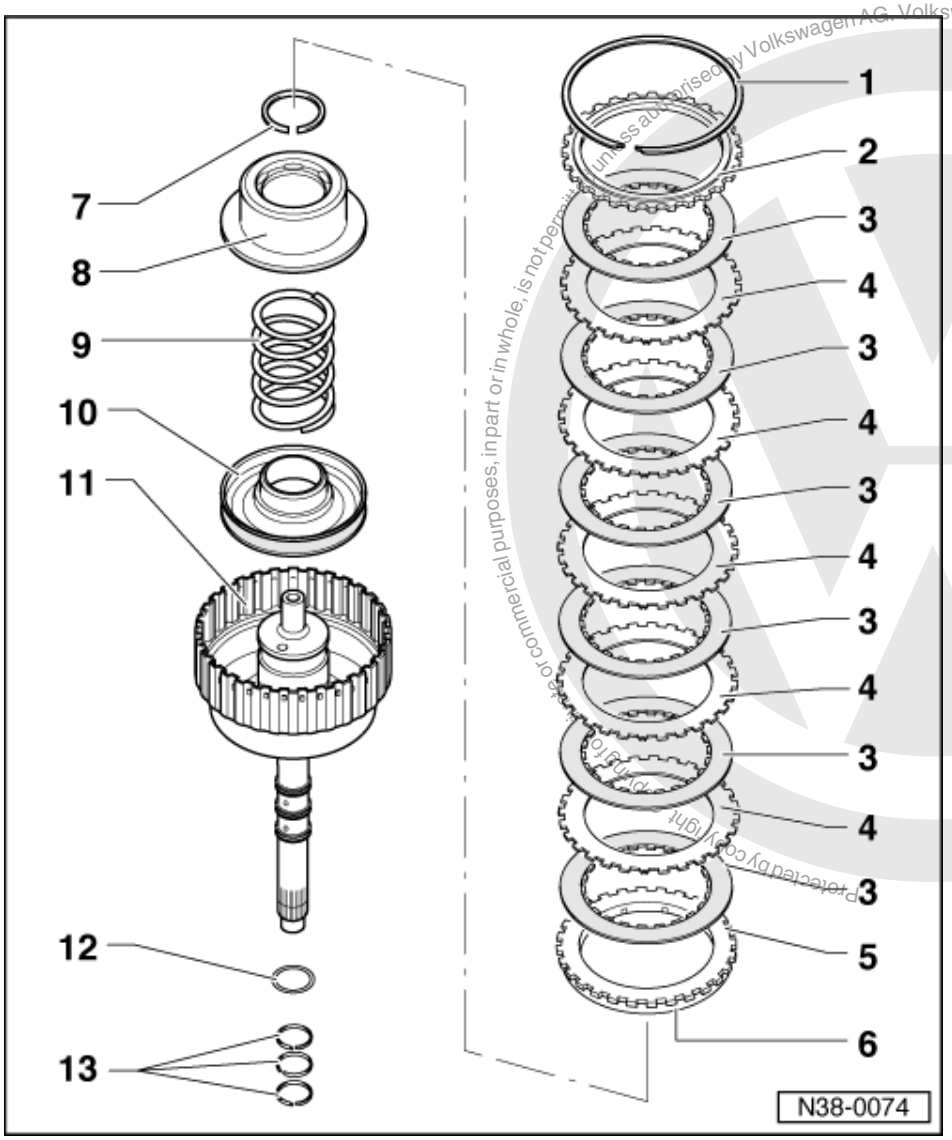

Volkswagen AG. Volkswagen AG does not guarantee or accept any liability with respect to the correctness of information in this document. Copyright by Volkswagen AG.
For commercial purposes, in part or in whole, is not permitted unless authorised by Volkswagen AG.
Protected by copyright.
satelettronica

9 Spring
- Seat between piston and piston cap

10 Piston
- Sealing lips are vulcanised to piston
- Moisten with ATF before installing
- Turn piston slightly when installing

11 Clutch housing with turbine shaft
- There are two different versions => Page 16
- Height varies according to number of inner and outer plates

12 O-ring
- Always replace
- Installing =>Fig. 4

13 Piston ring
- Check that it is correctly located => Fig. 2
- Removing and installing => Fig. 3

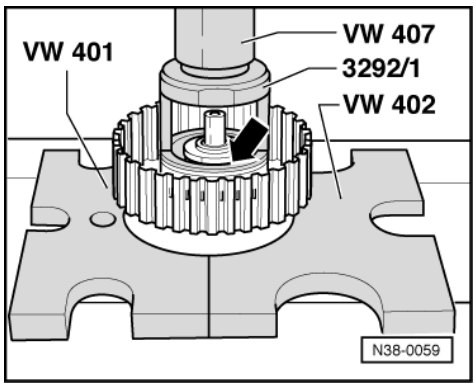

-> Fig.1 Removing and installing circlip

- Press down carefully on piston cap until the circlip an be installed.

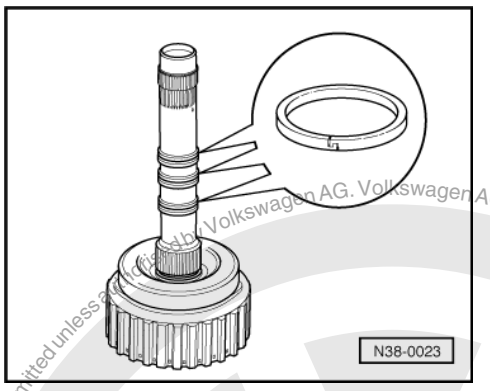

-> Fig.2 Checking seating of piston rings

There is a piston ring installed on the pump shaft inside the clutch housing (arrow).

- Ensure that the ends of the piston rings are hooked together.

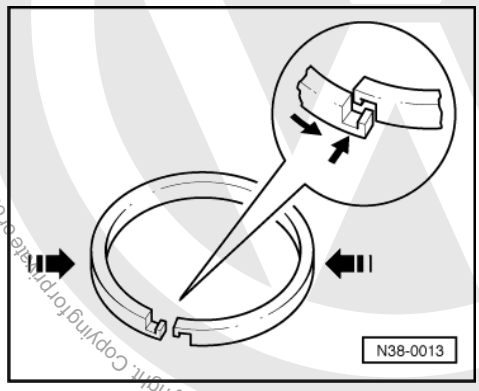

-> Fig.3 Removing and installing piston ring

Removing

- Press piston ring together and unhook by hand.
- Spread piston on both sides and remove. Do not pull out of groove from one side.

Protected by copyright. Copyright by Volkswagen AG. Volkswagen AG does not guarantee or accept any liability with respect to the correctness of information in this document. Copying for private or commercial purposes, in part or in whole, is not permitted unless authorised by Volkswagen AG.
satelettronica

Installing

- Place piston ring in groove.
- To hook ends together press sides of ring in and guide ends over one another.

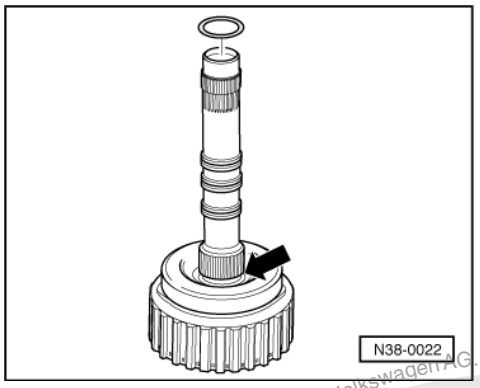

-> Fig.4 Installing O-ring

- Insert O-ring in the recess in the turbine shaft (arrow).

6 - Removing and installing oil pan

6.1 - Removing and installing oil pan

Special tools, workshop equipment, testers, measuring instruments and auxiliary items required

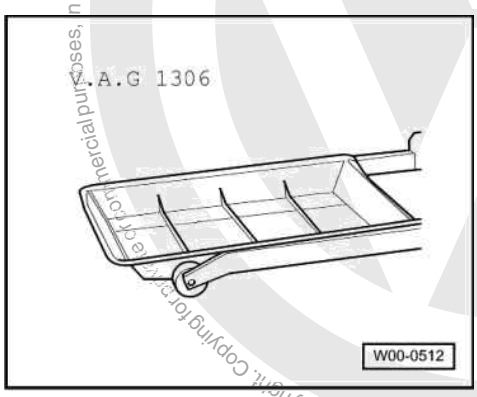

- V.A.G 1306 Drip tray

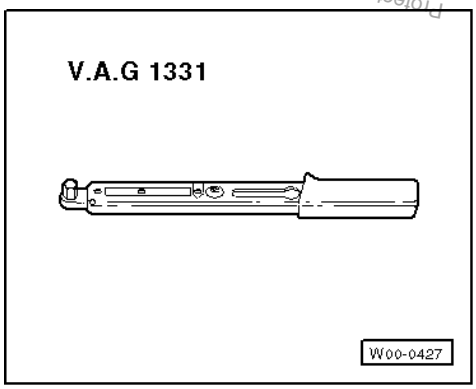

- V.A.G 1331 Torque wrench

Protected by copyright. Copying for private or commercial purposes, in part or in whole, is not permitted unless authorised by Volkswagen AG. Volkswagen AG does not guarantee or accept any liability with respect to the correctness of information in this document. Copyright by Volkswagen AG.
satelettronica

Removing

- Observe general repair instructions=> page 13 .

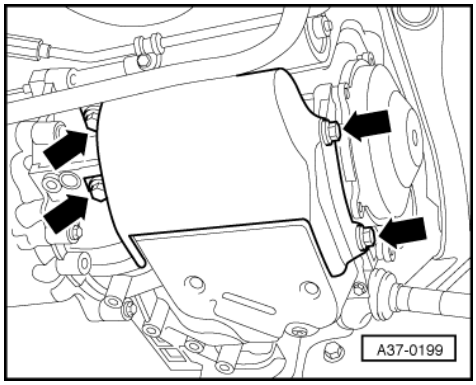

- Remove noise insulation -arrows-.
- -> Remove ATF oil pan protective plate -arrows-.
- Place drip tray V.A.G 1306 underneath.

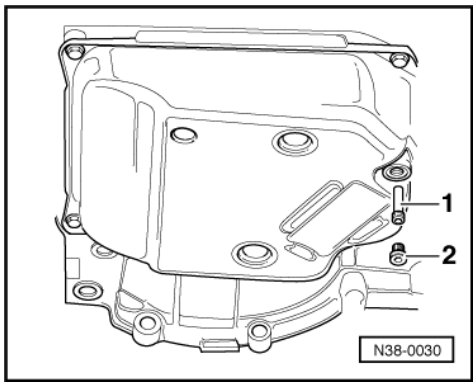

- -> Remove sealing plug -2-.
- Remove overflow pipe -1- and allow ATF to drain.
- Unscrew bolts on oil pan in diagonal sequence and remove oil pan.

Installing

Install in reverse order but note following:

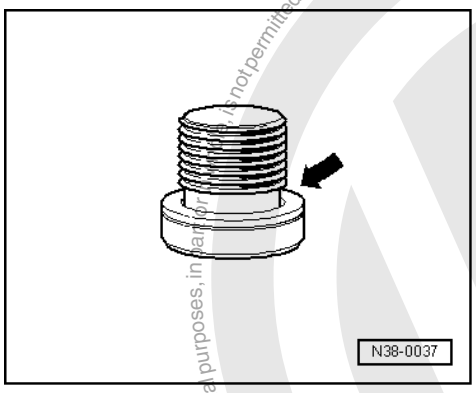

- Cut open seal -arrow- with side-cutting pliers. Always renew seal.
- Clean magnets in the recesses of oil pan. Ensure magnets are seated correctly in the oil pan.
- Install oil pan with new gasket.
- Tighten oil pan bolts in several stages and in diagonal sequence => page 192 , 4 -Bolt.

Protected by copyright. Copying for private or commercial purposes, in part or in whole, is not permitted unless authorised by Volkswagen AG. Volkswagen AG does not guarantee or accept any liability with respect to the correctness of information in this document. Copyright by Volkswagen AG.
satelettronica

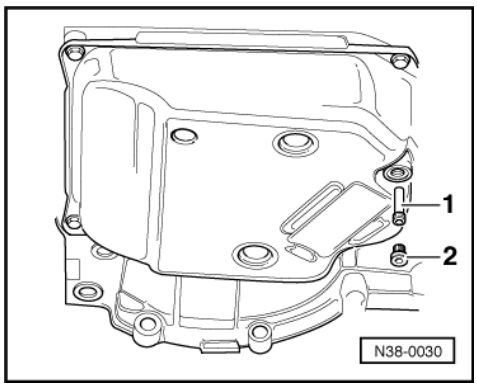

- -> Fit and tighten bolts for overflow pipe -1- => 192 , 2 -overflow pipe.
- After repairs, fit new seal to plug -2- and screw in hand-tight.
- Fill with 3 litres of ATF then check ATF level and top-up => Page 72 .

7 - Removing and installing oil strainer

7.1 - Removing and installing oil strainer

Removing

- Remove oil pan => page 188 .

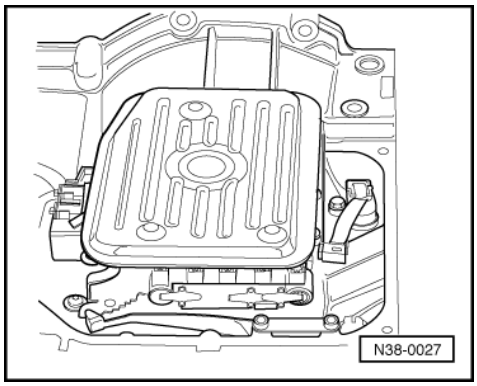

- -> Pull ATF screen off valve chest.

Installing

- Before installing ATF strainer, insert seal in the valve chest.
- Moisten seal in valve chest with ATF.
- Push oil strainer into valve chest about 3 mm (not to stop).
- When oil pan is installed, ATF screen will be pushed into correct installation position.
- Fit oil pan => page 188 .

Protected by copyright. Copying for private or commercial purposes, in part or in whole, is not permitted unless authorised by Volkswagen AG. Volkswagen AG does not guarantee or accept any liability with respect to the correctness of information in this document. Copyright by Volkswagen AG.
satelettronica

8 - Removing and installing valve chest

8.1 - Removing and installing valve chest

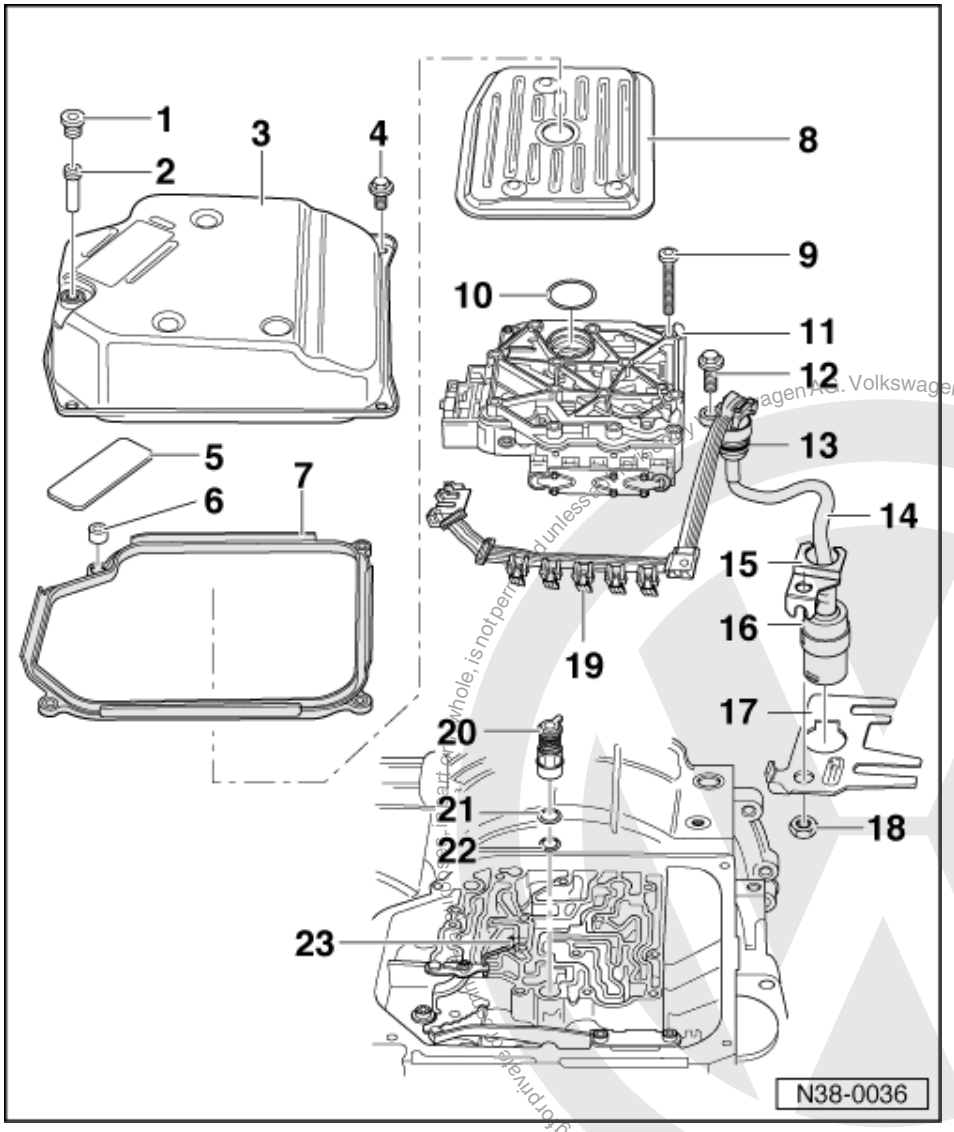

8.2 - Assembly overview

Sequence for dismantling and assembling => Page 200

Warning!
Do not run engine or tow vehicle with oil pan removed or when there is no ATF in gearbox.

- The valve chest or conductor strip can be removed with the gearbox installed.
- Always renew soiled or defective valve chest.
- Apply only ATF to O-rings when fitting. Other lubricants lead to malfunctioning of the gearbox hydraulics.

Protected by copyright. Copying for private or commercial purposes, in part or in whole, is not permitted unless authorised by Volkswagen AG. Volkswagen AG does not guarantee or accept any liability with respect to the correctness of information in this document. Copyright by Volkswagen AG.
satelettronica

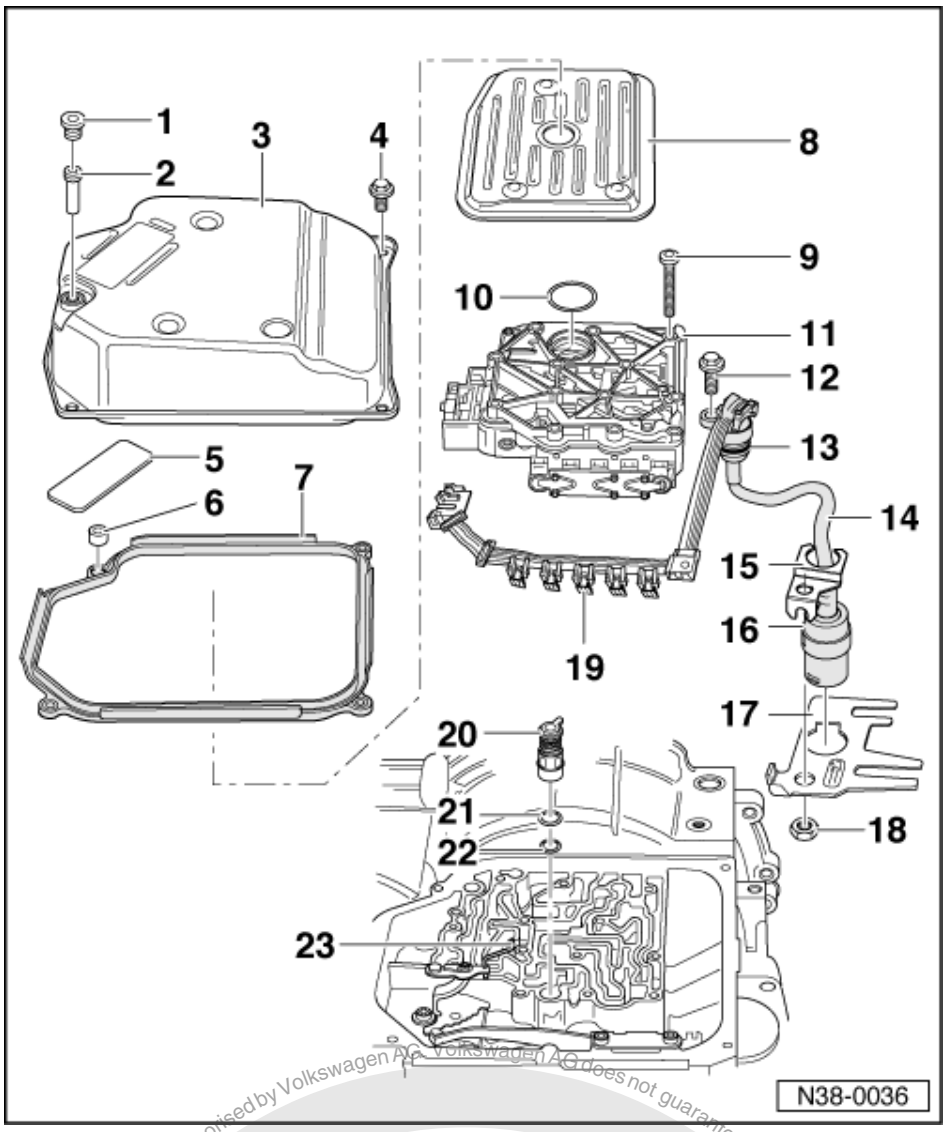

1 Plug
- Always renew seal =>Fig. 2
- Tightening => page 72

2 Overflow pipe, 2 Nm
- Remove to drain ATF => Fig. 1
- Screw in onto stop
- Checking ATF level and topping-up => Page 72

3 Oil pan
- Removing and installing => Page 188

4 Bolt, 12 Nm
- Tighten oil pan bolts in several stages and in diagonal sequence

5 Magnet
- Insert in the recess in oil pan

Protected by copyright. Copying for private or commercial purposes, in part or in whole, is not permitted unless authorised by Volkswagen AG. Volkswagen AG does not guarantee or accept any liability with respect to the correctness of information in this document. Copyright by Volkswagen AG.

satelettronica

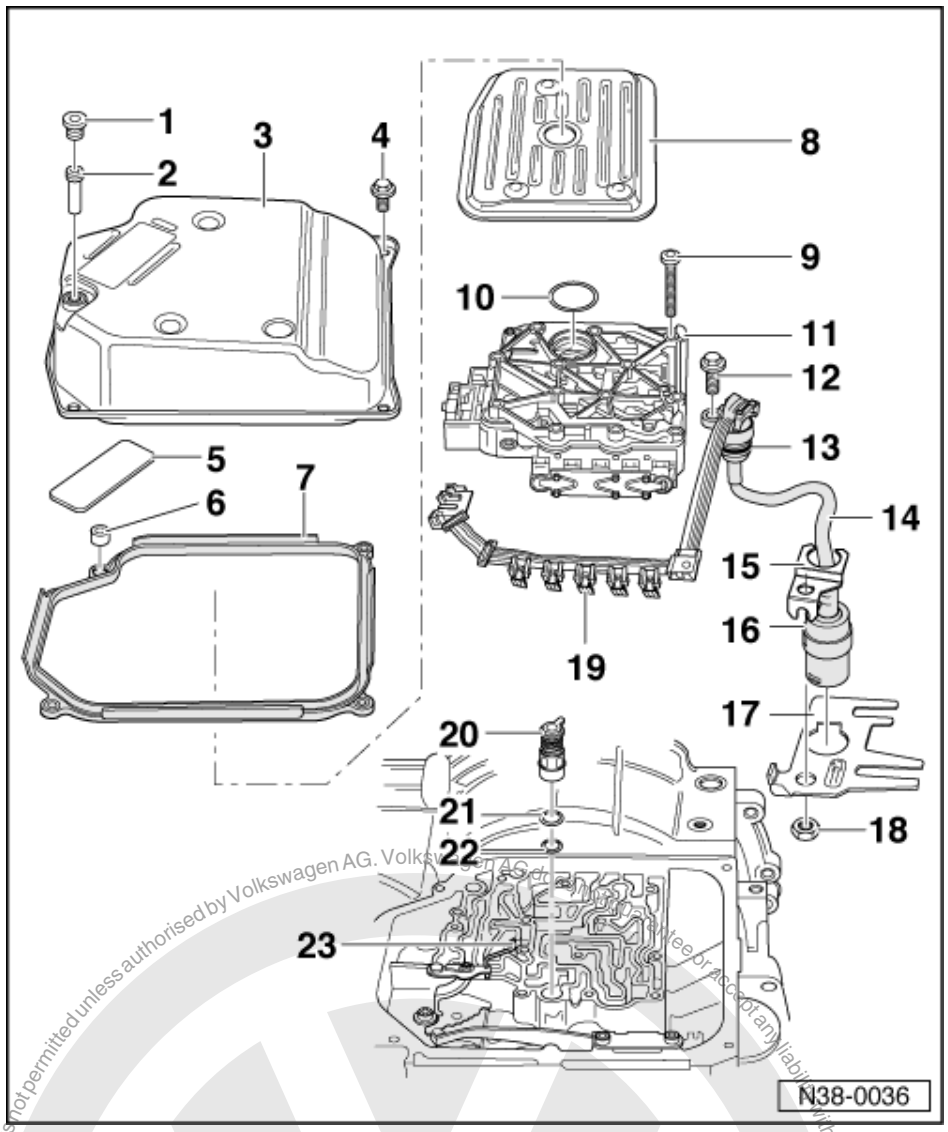

6 Spacer bush
- Press into gasket

7 Gasket
- Always replace
- Press spacer bushes into gasket

8 ATF screen
- Removing and installing
  => page 190

9 Bolt, 5 Nm
- Observe tightening torque => 202

10 Gasket
- Always replace
- Moisten with ATF and insert
- Insert in valve chest

Protected by copyright. Copying for private or commercial purposes, in part or in whole, is not permitted unless authorised by Volkswagen AG. Volkswagen AG does not guarantee or accept any liability with respect to the correctness of information in this document. Copyright by Volkswagen AG.
satelettronica

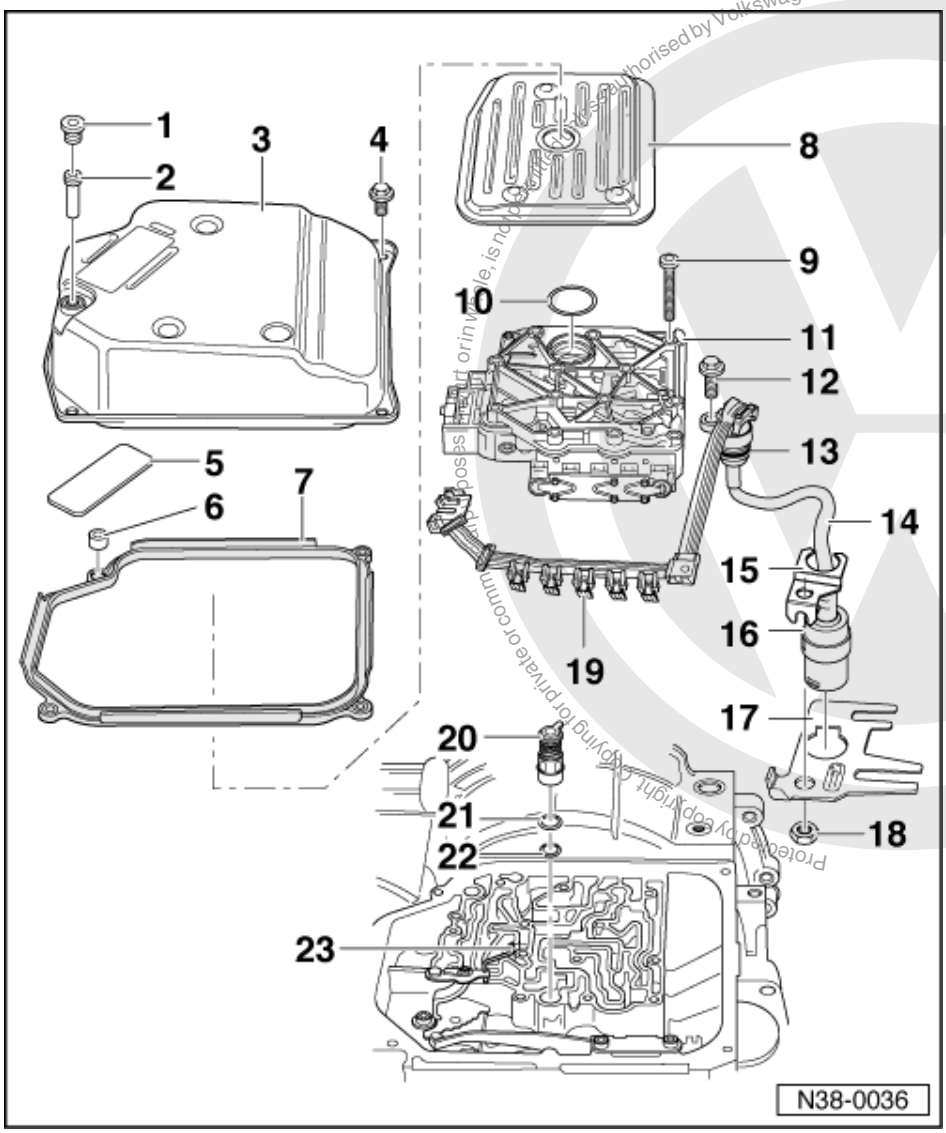

11 Valve chest

- Removing and installing
  => page 200
- Marking =>Fig. 4
- Installing seal -item 10 -
- After installing new valve chest, initiate basic setting

=> Automatic gearbox 01M, self-diagnosis; Repair group 01; Performing self-diagnosis; Initiating basic setting
Performing self-diagnosis Initiating basic setting

12 Bolt for cable port, 10 Nm

13 O-ring

- For cable cable port
- Always replace

14 Conductor strip

- With cable cable port and connector
- Gearbox oil (ATF) temperature sender -G93- integrated in conductor strip
- Can be removed and installed with gearbox installed
- Removing and installing
  => page 200

Protected by copyright. Copying for private or commercial purposes, in part or in whole, is not permitted unless authorised by Volkswagen AG. Volkswagen AG does not guarantee or accept any liability with respect to the correctness of information in this document. Copyright by Volkswagen AG.
satelettronica

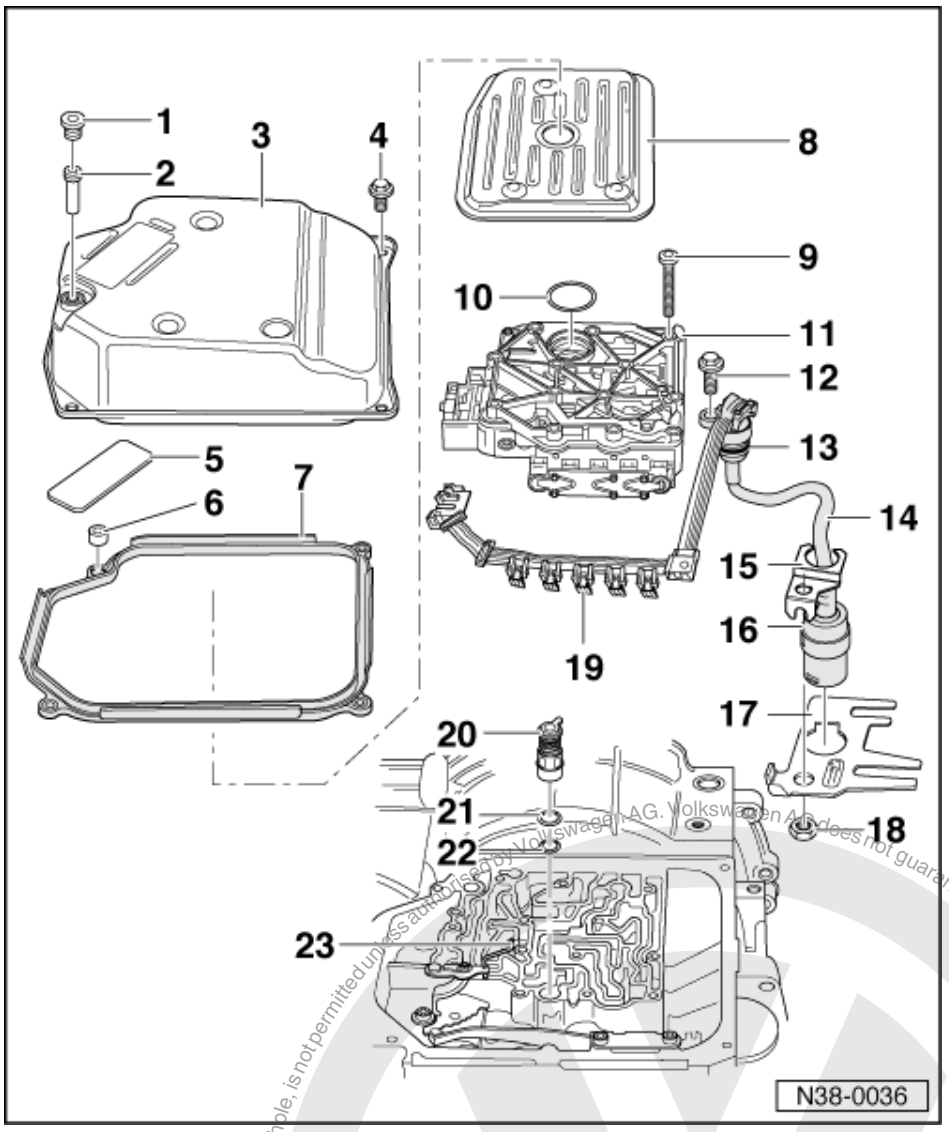

15 Retaining bracket

16 Input cable connector

- Secure to gearbox housing

17 Retaining bracket

- Insert lug of input cable connector in recess in retaining bracket

18 Nut, 10 Nm

- for retaining bracket - 15 -

19 Plug for solenoid valves

- Pull from solenoid valves using 3373 => 200

20 Sealing plug

- Take out before removing and installing free wheel
- Insert so that the lug is located in groove on housing =>Fig. 3

Protected by copyright. Copying for private or commercial purposes, in part or in whole, is not permitted unless authorised by Volkswagen AG. Volkswagen AG does not guarantee or accept any liability with respect to the correctness of information in this document. Copyright by Volkswagen AG.
satelettronica

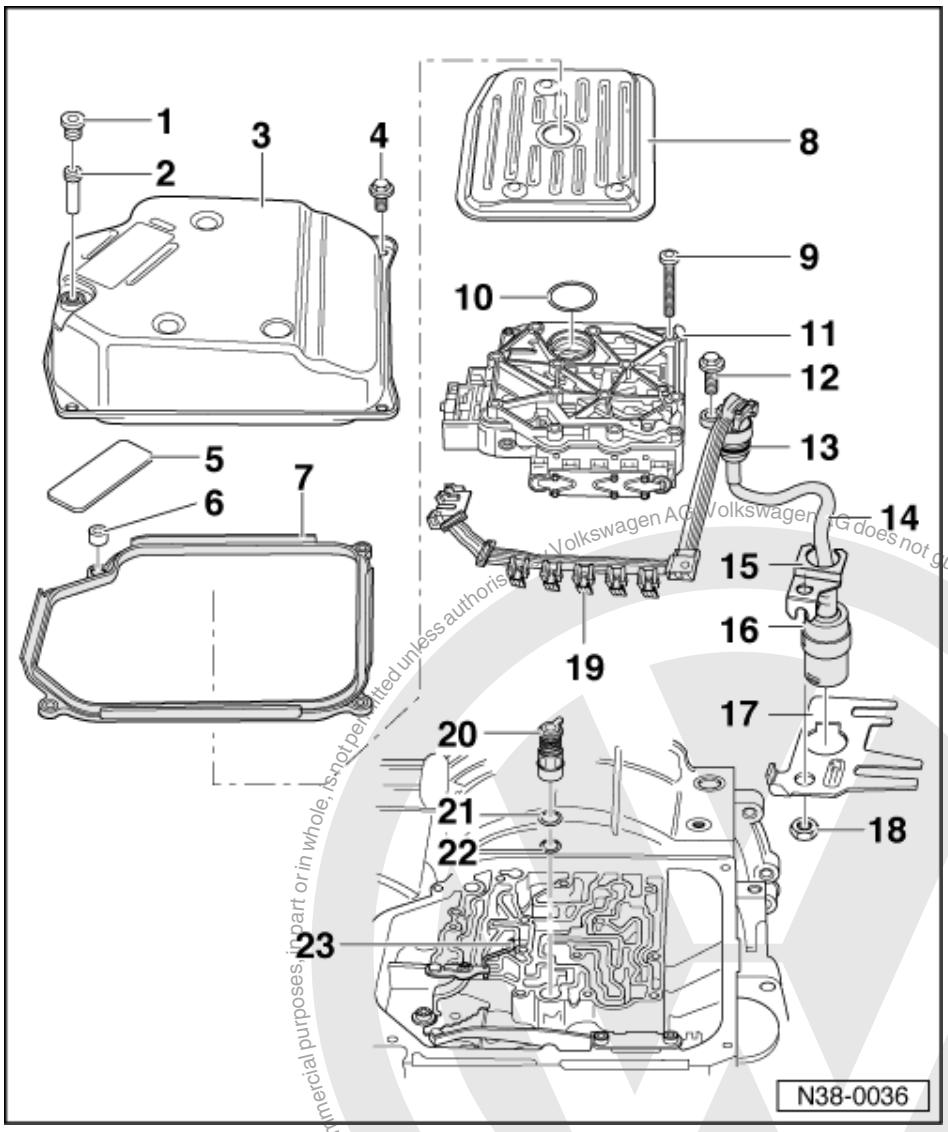

21 O-ring

- Always replace
- Moisten with ATF and insert
- Place O-ring onto sealing plug - 20 -

22 O-ring

- Always replace
- Moisten with ATF and insert
- Place O-ring onto sealing plug - 20 -

23 Operating rod for manual selector valve

- Unhooking => 200
- Install in stepped side of manual selector valve =>fig. 6
- Adjusting =>Fig. 7
- Always renew steel spring and bolt for manual selector valve operator=>Fig. 5

Protected by copyright. Copying for private or commercial purposes, in part or in whole, is not permitted unless authorised by Volkswagen AG. Volkswagen AG does not guarantee or accept any liability with respect to the correctness of information in this document. Copyright by Volkswagen AG.
satelettronica

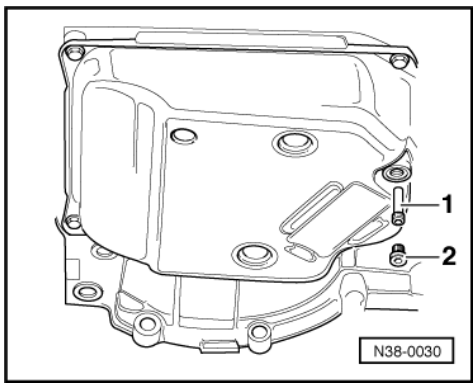

-> Fig.1 Draining ATF

- Place drip tray V.A.G 1306 underneath.
- Remove plug -2-.
- Remove overflow pipe -1- and allow ATF to drain.

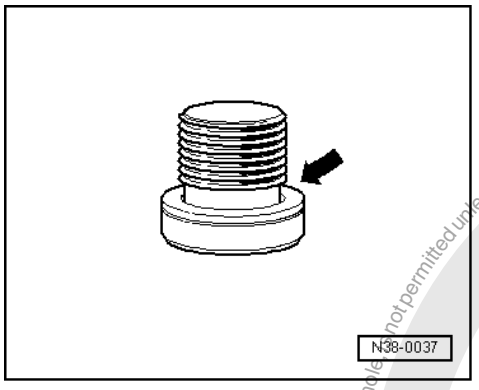

-> Fig.2 Replacing plug seal

- Cut open seal -arrow- with side cutting pliers, always renew seal.

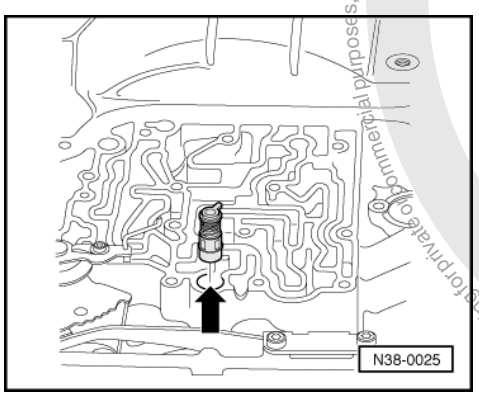

-> Fig.3 Inserting sealing plug

Pull sealing plug out of housing before removing and installing free wheel otherwise the sealing plug and the O-ring will be damaged.

- Moisten new O-rings with ATF and fit on sealing plug.
- Insert sealing plug in hole in gearbox housing -arrow-.

Protected by copyright. Copying for private or commercial purposes, in part or in whole, is not permitted unless authorised by Volkswagen AG. Volkswagen AG does not guarantee or accept any liability with respect to the correctness of information in this document. Copyright by Volkswagen AG.
satelettronica

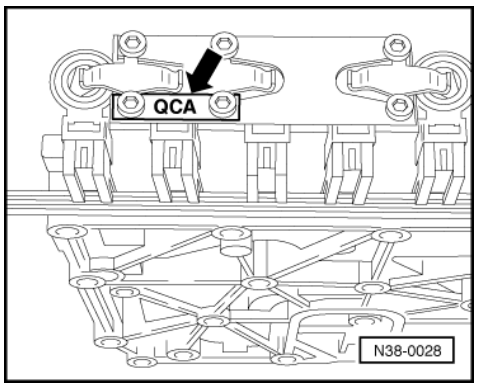

-> Fig.4 Identification of valve chest

Code letters are stamped on a metal tab. Metal tab must remain on the valve chest.

Allocation valve chest/gearbox =>from Page 3

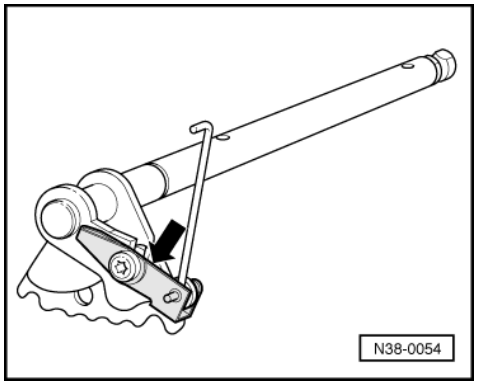

-> Fig.5 Always renew steel spring and bolt -arrow-

- Remove steel spring -arrow- with operating rod and lever from selector shaft in gearbox.

(For better clarification the selector shaft is illustrated here in a removed state.)

◆ Always renew bolt with steel spring.

- If an exchange component is used, insert new, supplied operating rod.
- Fit steel spring and bolt to selector shaft. Do not tighten yet!

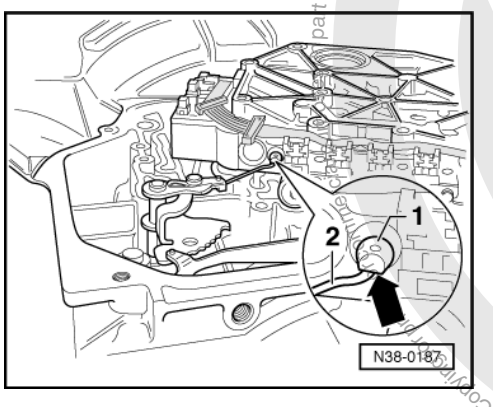

Protected by copyright. Copyright by Volkswagen AG.
Copyright by Volkswagen AG. Volkswagen AG does not guarantee or accept any liability with respect to the correctness of information in this document.
satelettronica

-> Fig.6 Hooking operating rod onto manual selector valve

- Shift detent plate/shaft into position "1".
- Turn manual selector valve -1- so that shoulder faces operating rod -2-.
- Guide operating rod with manual selector valve into valve chest.
- Only now should lever with new steel spring and loose bolt be fitted to the selector shaft.
- Do not yet tighten bolt for lever.

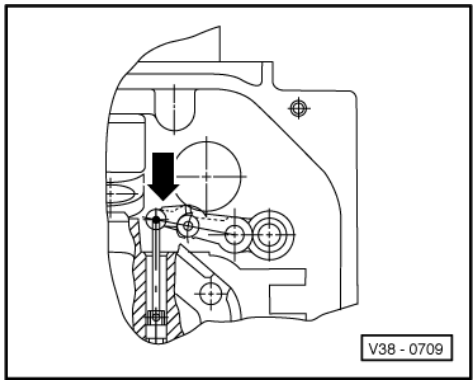

-> Fig.7 Adjusting operating rod for manual selector valve

- Move detent plate/selector shaft to position "P".
- Push operating rod with manual selector valve into valve chest to stop (direction of arrow) and tighten bolt for lever to 4 Nm.

◆ Manual selector valve must always rest on stop. Counterhold when tightening bolt in direction of arrow.
◆ Always renew bolt with retaining bracket for manual selector valve.

Protected by copyright. Copying for private or commercial purposes, in part or in whole, is not permitted unless authorised by Volkswagen AG. Volkswagen AG does not guarantee or accept any liability with respect to the correctness of information in this document. Copyright by Volkswagen AG.

satelettronica

8.3 - Sequence for dismantling and assembling

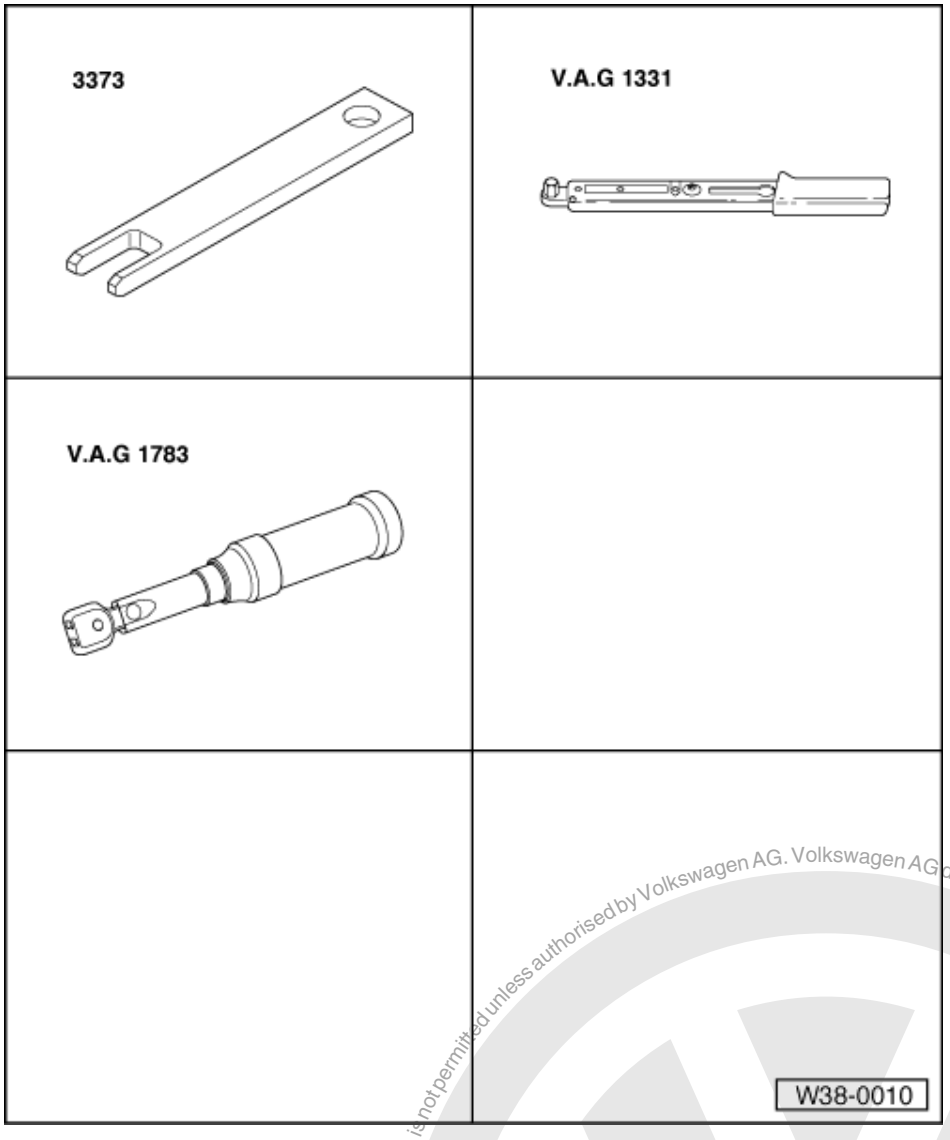

Special tools, workshop equipment, test and measuring appliances and auxiliary items required

- 3373 Flexible printed circuit film lever
- V.A.G 1331 Torque wrench
- V.A.G 1783 Torque wrench

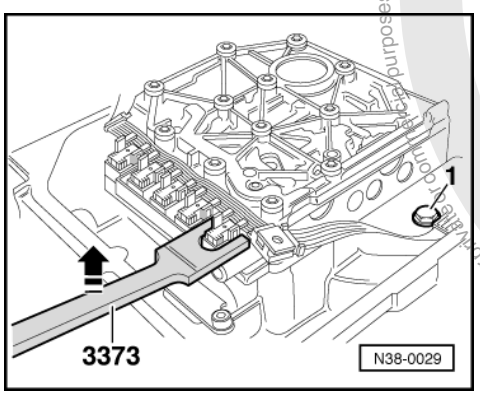

Protected by copyright. Copying for private or commercial purposes, in part or in whole, is not permitted unless authorised by Volkswagen AG. Volkswagen AG does not guarantee or accept any liability with respect to the correctness of information in this document. Copyright by Volkswagen AG.
satelettronica

Removing

- Observe general repair instructions=> page 13 .
- Remove oil pan => page 188 .
- Remove oil strainer => 190 .
- -> Remove conductor strip using flexible printed circuit lever 3373.
- Place 3373 onto stop under the solenoid valve plug.
- Pull plug off with 3373 in direction of arrow.

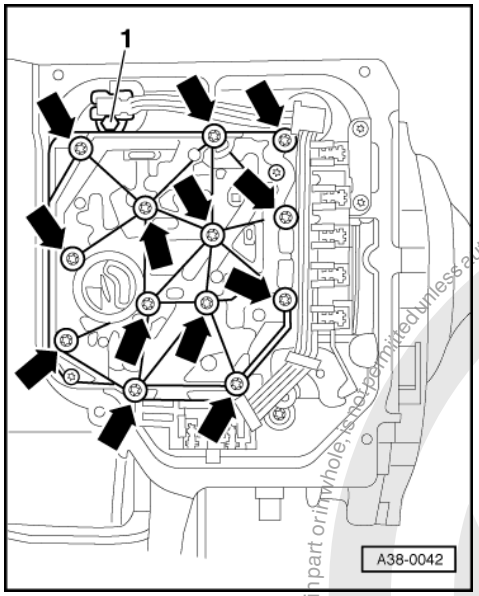

- Remove bolt -1- in cable port.
- Press cable port out of gearbox housing from outside to inside.
- Unbolt retaining bracket for plug, remove plug.
- -> Only remove the bolts from the valve chest which are marked with an arrow.
- Do not remove any other bolts as this could influence the function of the valve chest.

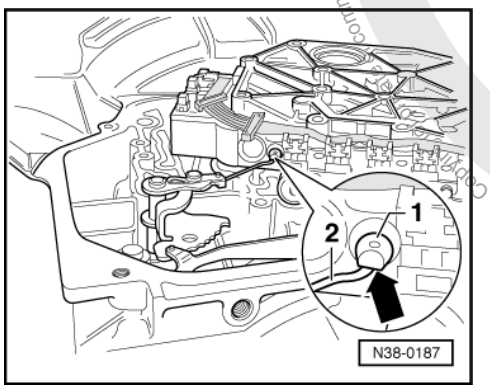

-> When valve chest is removed, the manual selector valve -1- remains in valve chest.

- Shift selector lever/shaft into position "1".
- Pull manual selector valve out until it is just possible to unhook the operating rod -2-.
- Secure manual selector valve so that it cannot fall out.
- Do not interchange manual selector valve and valve chest.
- Detach valve chest from gearbox.

Protected by copyright. Copyright by Volkswagen AG. Volkswagen AG does not guarantee or accept any liability with respect to the correctness of information in this document. Copyright by Volkswagen AG. Copying, in part or in whole, is not permitted unless authorised by Volkswagen AG.
satelettronica

Installing

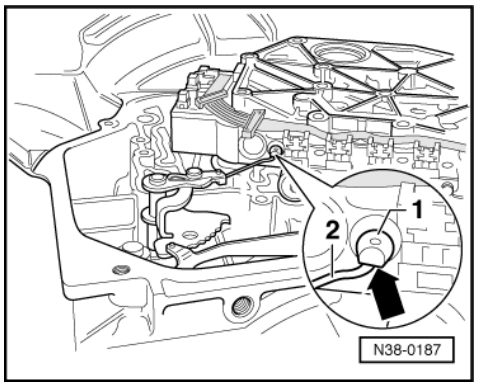

Install in reverse order but note following:

- -> Turn manual selector valve -1- so that the shoulder is to operating rod.
- Guide operating rod -2- with manual selector into valve chest.
- If exchange component is used, attach operating rod and manual selector valve => 196 , item 23 .

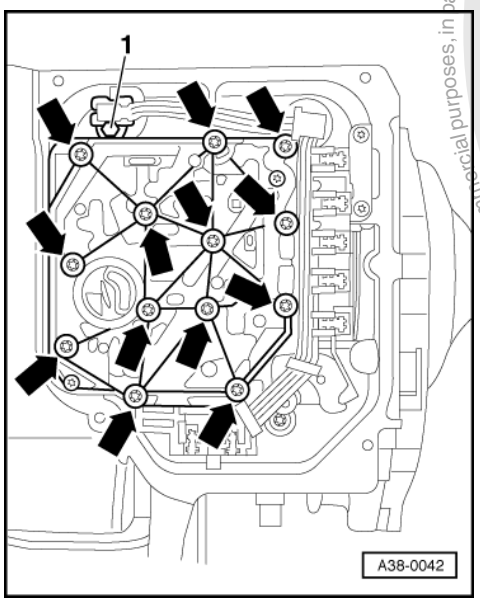

- -> Tighten bolts (hand-tight) securing valve chest -arrows-.
- Tighten bolts to specified torque, working from the inside outwards => page 193 , 9 -Bolt.
- Adjust operating lever for manual selector valve => 199 , fig. 7 .

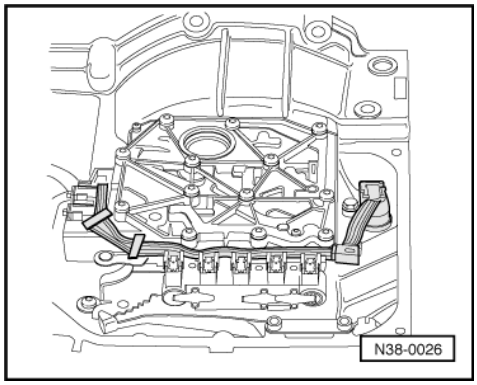

- Route conductor strip as illustrated. Do not kink or twist when installing.
- Press conductor strip plug onto solenoid valve until it engages.
- Insert plug through gearbox housing and secure retaining bracket => 195 , 18 -nut.
- Insert cable port and secure with bolt for cable port=> 194 , 12 -bolt for cable port.

Protected by copyright. Copying for private or commercial purposes, in part or in whole is not permitted unless authorised by Volkswagen AG. Volkswagen AG does not guarantee or accept any liability with respect to the correctness of information in this document. Copyright by Volkswagen AG.
satelettronica

- Install oil strainer => 190 .
- Fit oil pan => page 188 .
- Perform self-diagnosis and initiate basic setting.

=> Automatic gearbox 01M self-diagnosis; Repair group 01; Performing self-diagnosis; Initiating basic setting Performing self-diagnosis Initiating basic setting

9 - Dismantling and assembling parking lock

9.1 - Dismantling and assembling parking lock

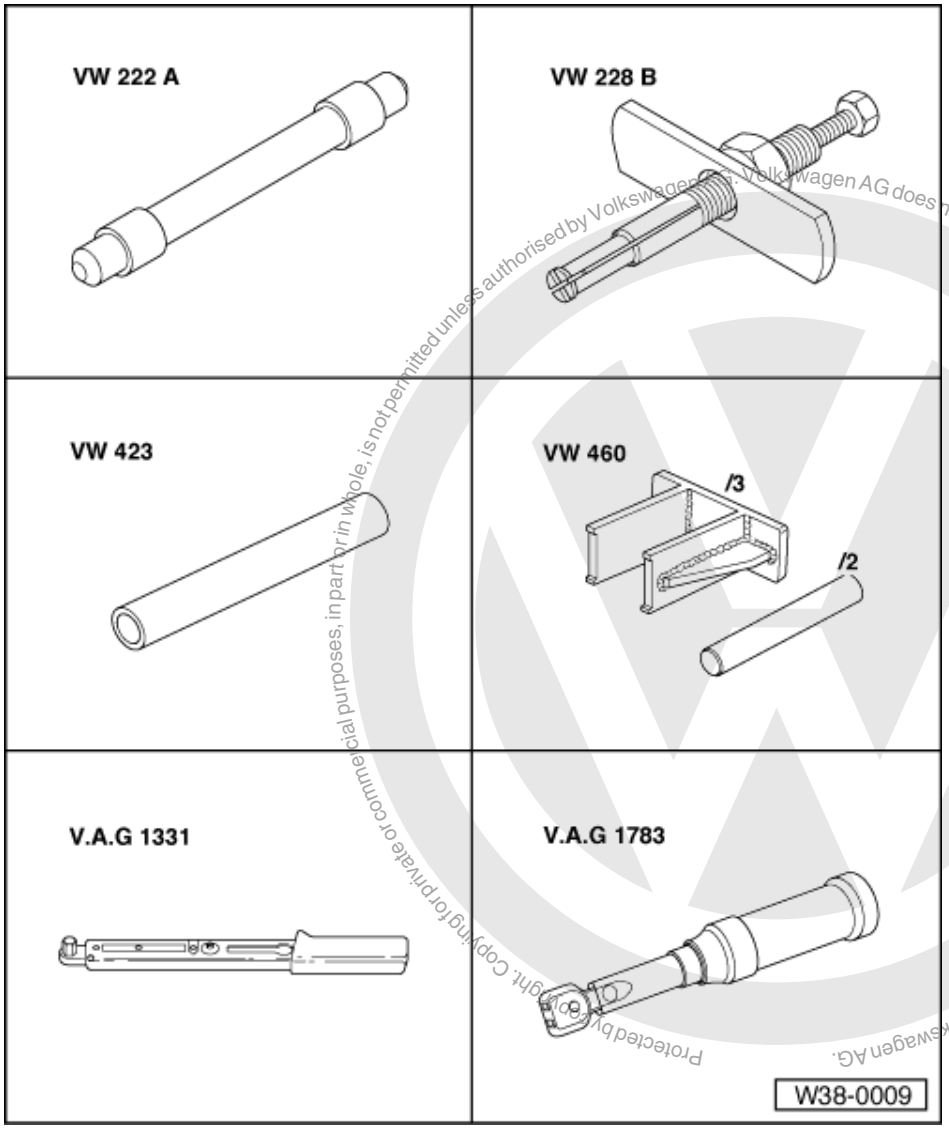

Protected by copyright. Copying for private or commercial purposes, in part or in whole, is not permitted unless authorised by Volkswagen AG. Volkswagen AG does not guarantee or accept any liability with respect to the correctness of information in this document. Copyright by Volkswagen AG.
satelettronica

Special tools, workshop equipment, test and measuring appliances and auxiliary items required

- VW 222 A Drift
- VW 228 B Puller
- VW 423 Tube
- VW 460/2 Mandrel
- V.A.G 1331 Torque wrench
- V.A.G 1383 Torque wrench

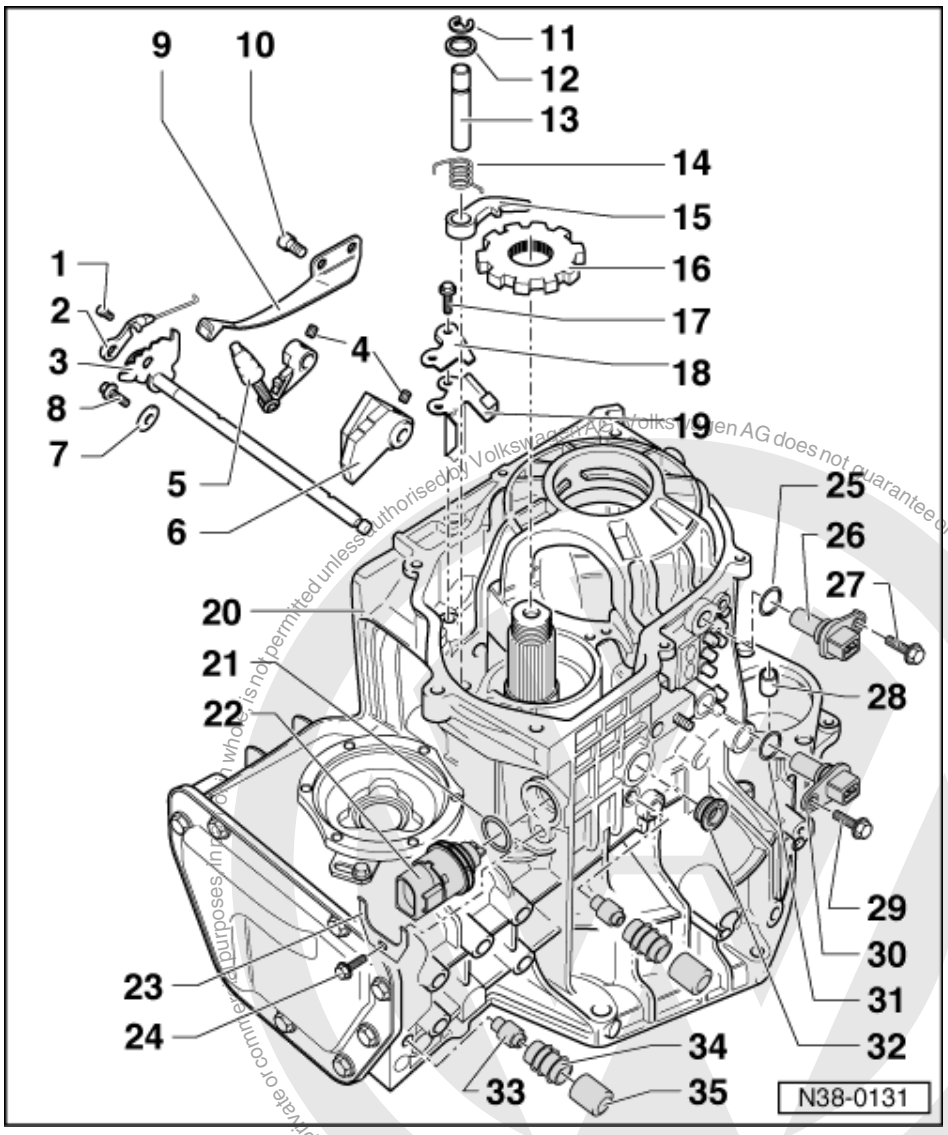

To dismantle and assemble the parking lock, the output gear must be removed => 232 , Removing and installing drive pinion.

1 **Bolt, 4 Nm**
- Always renew steel spring and bolt for manual selector valve operator =>Page 198 , Fig. 5

2 **Manual selector valve control**
- Adjusting => Page 191 , Removing and installing valve chest
- Always renew steel spring and bolt for manual selector valve operator =>Page 198 , Fig. 5

3 **Selector shaft with selector segment**
- Removing and installing => Fig. 2

satelettronica

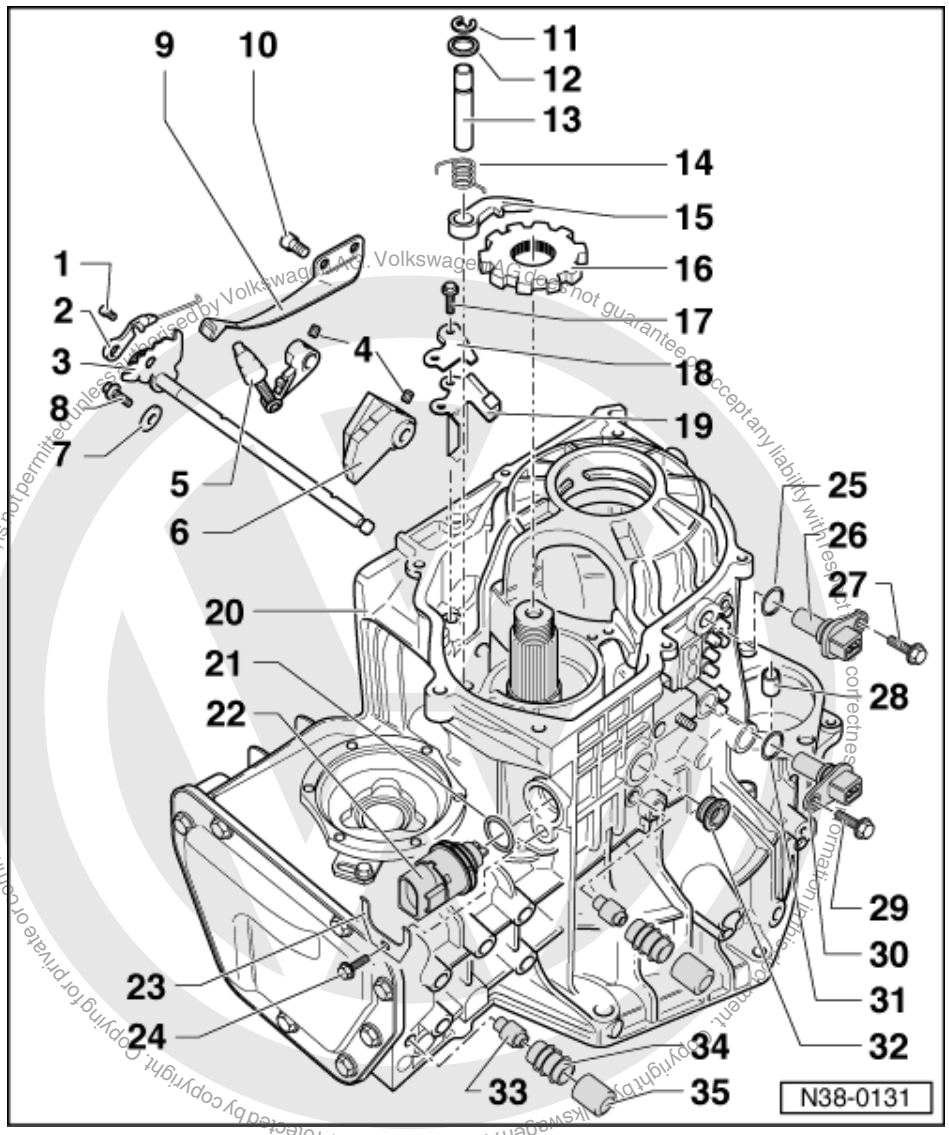

4 Spring pin
- Driving out and in => Fig. 1

5 Engaging lever
- Insert together with selector shaft and detent segment

6 Detent segment
- Insert together with selector shaft and engaging lever

7 Locking washer

8 Bolt, 10 Nm

9 Spring for selector segment

10 Bolt, 10 Nm

11 O-ring
- Always replace
- Only install on shafts with groove for circlip

12 Washer

satelettronica

Copyright by Volkswagen AG. Volkswagen AG does not guarantee or accept any liability with respect to the correctness of information in this document. Copyright by Volkswagen AG.

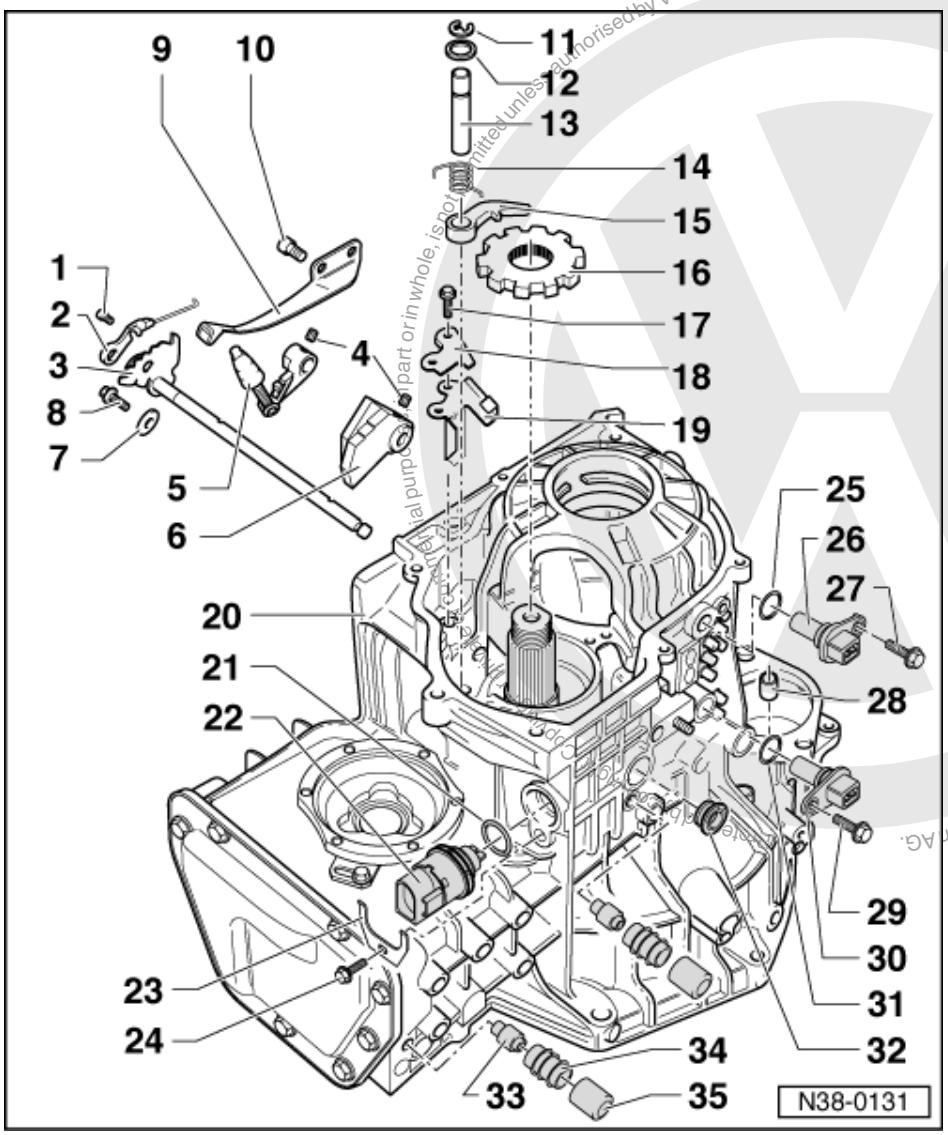

13 Shaft for detent lever
- Is secured by circlip and bearing cap of drive pinion

14 Return spring
- Inserting => Fig. 4

15 Detent lever
- Inserting with return spring => Fig. 4

16 Parking lock gear
- Rounded side faces teeth of drive pinion

17 Bolt, 14 Nm

18 Supporting plate
- Installing => Fig. 3

19 Guide plate
- Insert before supporting plate => Fig. 3

satelettronica

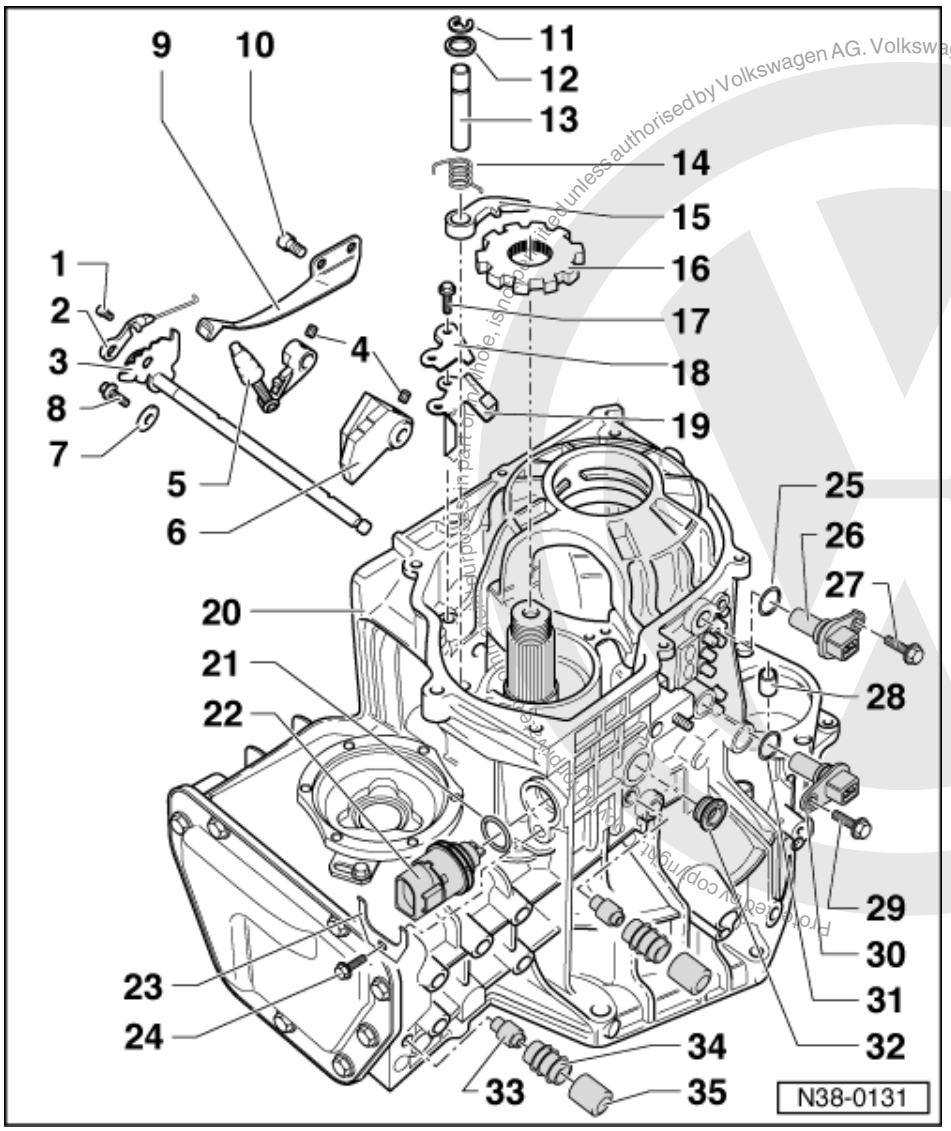

20 Gearbox housing

- It is not necessary to remove the drive gear to dismantle the parking lock

21 O-ring

- Always replace

22 Multi-function switch -F125-

- Removing and installing => Fig. 7
- Tested in the vehicle by self-diagnosis

=> Automatic gearbox 01M self-diagnosis; Repair group 01; Performing self-diagnosis; Reading measured value block Performing self-diagnosis Reading measured value block

23 Retainer

- For multi-function switch

24 Bolt, 10 Nm

25 O-ring

- Always replace

satelettronica

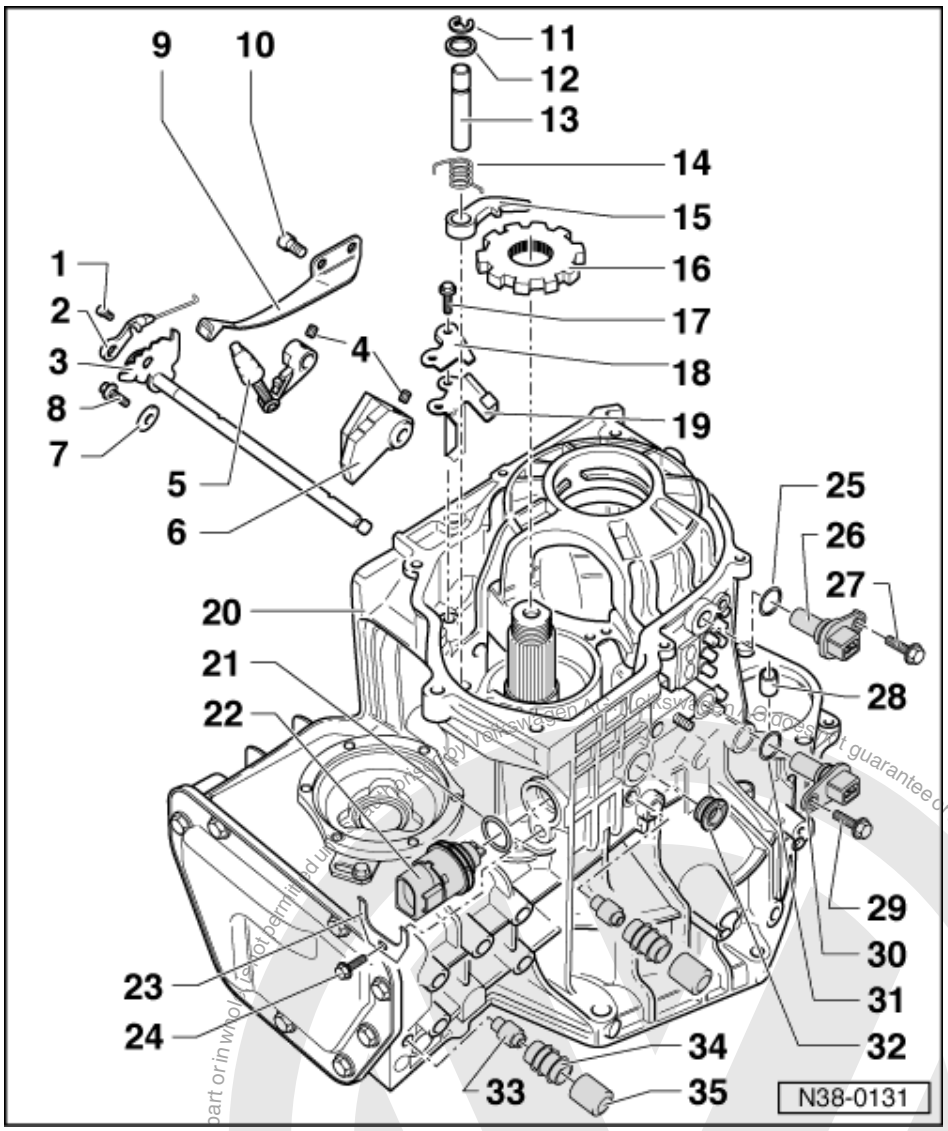

26 Road speed sender -G68-

- Removing and installing =>Fig. 9
- Tested in the vehicle by self-diagnosis

=> Automatic gearbox 01M self-diagnosis; Repair group 01; Performing self-diagnosis; Reading measured value block Performing self-diagnosis Reading measured value block

27 Bolt, 10 Nm

28 Mounting bush

- Removing => Fig. 5
- Installing => Fig. 6

29 Bolt, 10 Nm

satelettronica

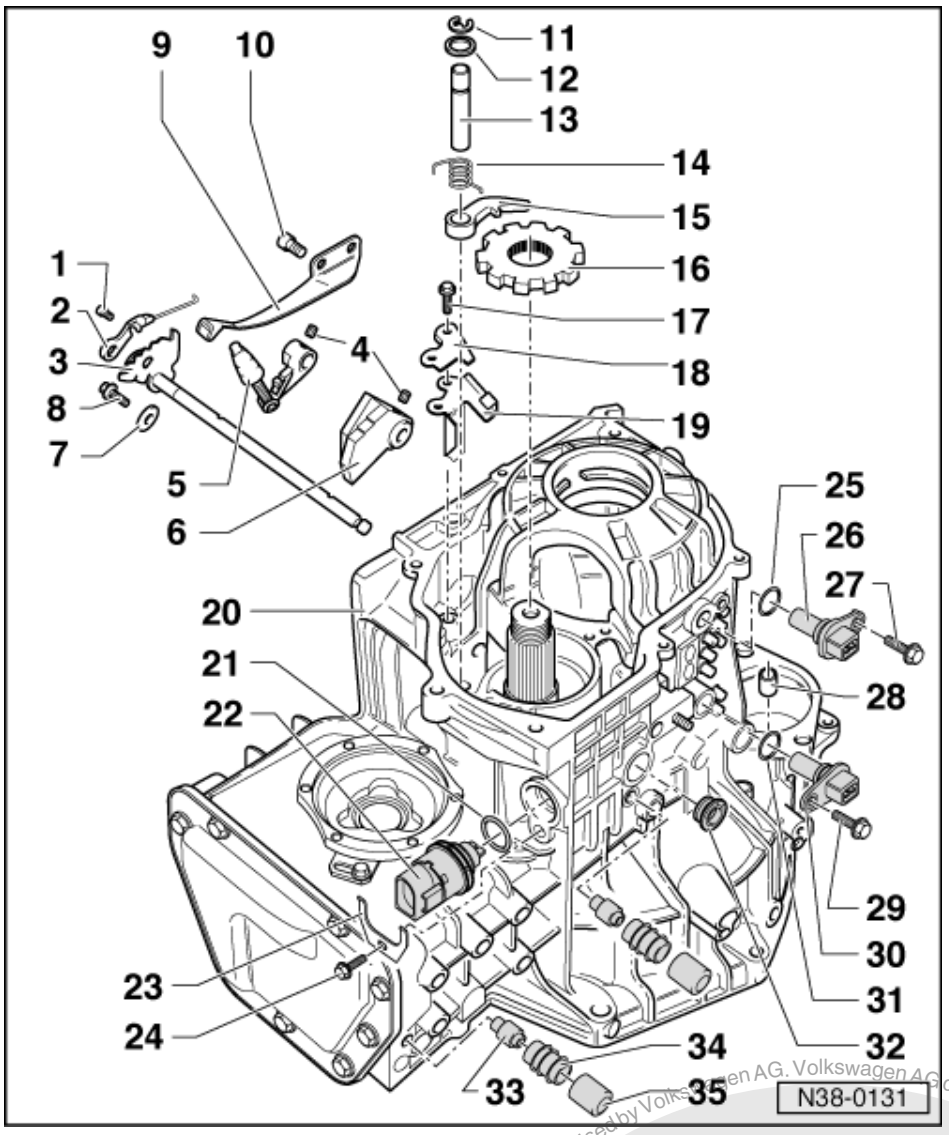

30 Gearbox speed sender -G38-

- Removing and installing => Fig. 8
- Tested in the vehicle by self-diagnosis

=> Automatic gearbox 01M self-diagnosis; Repair group 01; Performing self-diagnosis; Reading measured value block Performing self-diagnosis Reading measured value block

31 O-ring

- Always replace

32 O-ring

- Lever out with screwdriver
- Drive in flush with VW 423

33 Breather pipe

- Remove using pliers
- Drive onto stop with drift VW 460/2

34 Breather

35 Breather cap

Protected by copyright. Copying for private or commercial purposes, in part or in whole, is not permitted unless authorised by Volkswagen AG. Volkswagen AG does not guarantee or accept any liability with respect to the correctness of information in this document. Copyright by Volkswagen AG.
satelettronica

Protected by copyright. Copying for private or commercial purposes, in part or in whole, is not permitted unless authorised by Volkswagen AG. Volkswagen AG does not guarantee or accept any liability with respect to the correctness of information in this document. Copyright by Volkswagen AG.

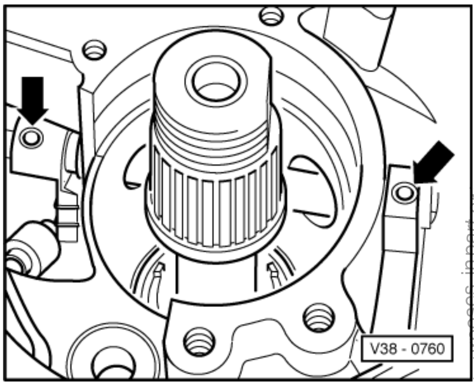

-> Fig.1 Driving spring pins (arrows) out and in

Driving out

- Drive spring pin for engaging lever and spring pin for detent segment out only far enough to remove the selector shaft.

Drive spring pin for engaging lever can otherwise fall into planetary gearbox.

Driving in

- Drive in spring pins until flush after inserting selector shaft, engaging lever and detent segment.

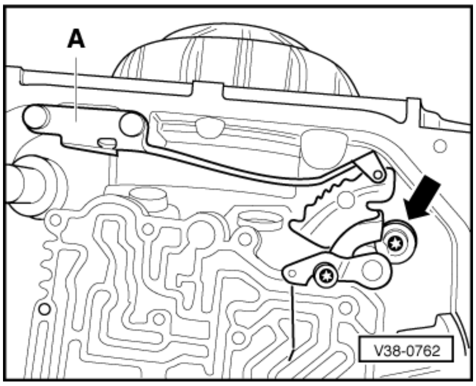

-> Fig.2 Removing and installing selector shaft with selector segments

With valve chest installed do not damage the conductor strip.

- Remove selector segment spring -A-.
- Remove screw with washer (arrow).

The washer prevents selector shaft movement.

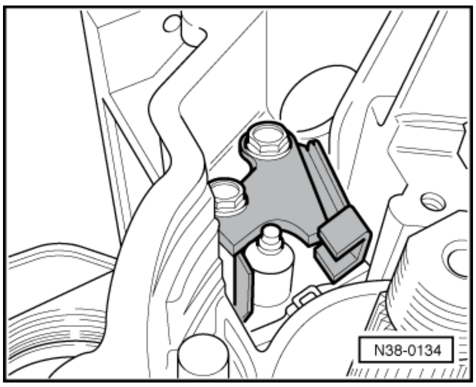

satelettronica

-> Fig.3 Inserting guide plate and supporting plate

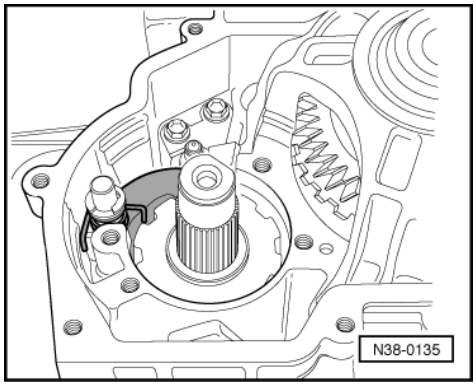

-> Fig.4 Inserting pawl with return spring

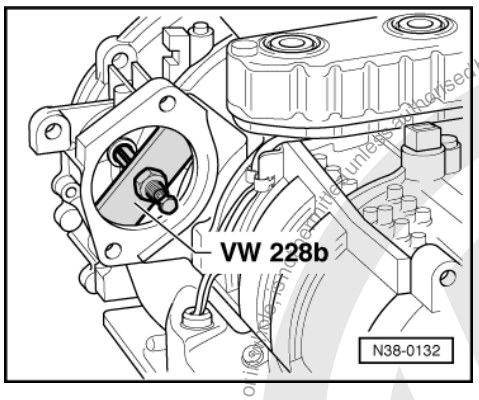

-> Fig.5 Pulling out starter bush.

- Obtain radio code on vehicles with coded radio.
- With the ignition switched off disconnect the battery earth strap.
- Remove starter.

=> Electrical system; Repair group 27; Starter; Removing and installing starter Starter Removing and installing starter

- Pull out starter bush.

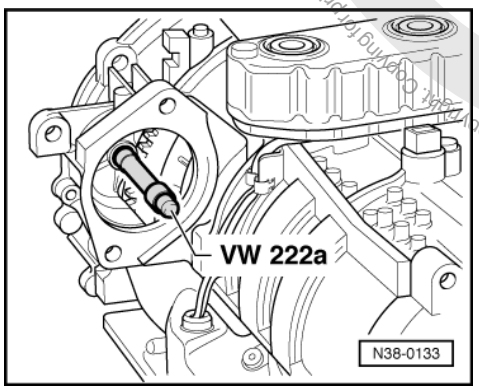

-> Fig.6 Driving in starter bush.

- Lubricate bush mounting before driving in.
- Drive in starter bush.

Protected by copyright. Copying for private or commercial purposes, in part or in whole, is not permitted unless authorised by Volkswagen AG. Volkswagen AG does not guarantee or accept any liability with respect to the correctness of information in this document. Copyright by Volkswagen AG.
satelettronica

- Install starter.

=> Electrical system; Repair group 27; Starter; Removing and installing starter Starter Removing and installing starter

- Reconnect earth strap to battery.
- Enter radio code.

=> Radio, Telephone, Navigation; Repair group 91; Radio systems Radio systems

Initialise electric windows, set clock.

=> Maintenance manual

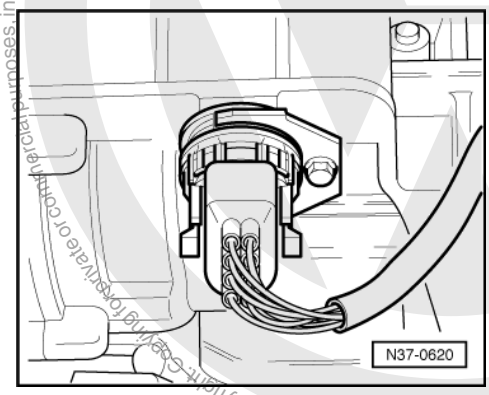

-> Fig.7 Removing and installing multi-function switch

Location: The multi-function switch is located on rear of gearbox.

- Switch off ignition, open bonnet.
- Pull connector off multi-function switch.
- Remove bolt and retainer.
- Remove multi-function switch.
- Always renew O-ring.

Installation is performed in the reverse order.

- Insert switch so that each pin rests on a slope of the detent segment.
- Tighten bolt to => Page 207 , item 24 .

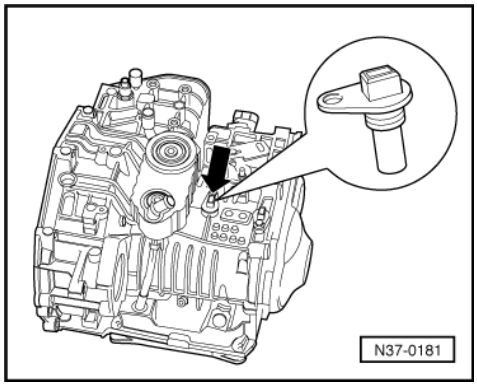

satelettronica

-> Fig.8 Removing and installing gearbox speed sender

Location: The gearbox speed sender -arrow- is located on top of gearbox.

- Switch off ignition, open bonnet.
- Pull white connector off sender.
- Remove bolt and pull sender out.
- Always renew O-ring.

Installation is performed in the reverse order.

- Tighten bolt to tightening torque => Page 208 , item 29 .

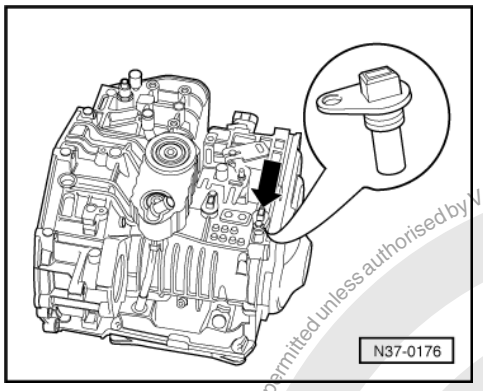

-> Fig.9 Removing and installing road speed sender -G68-

Location: The road speed sender -arrow- is located on top of gearbox.

- Pull black connector off sender.
- Remove bolt and pull sender out.
- Always renew O-ring.

Installation is performed in the reverse order.

- Tighten bolt to tightening torque => Page 208 , item 27 .

Protected by copyright. Copying for private or commercial purposes, in part or on whole, is not permitted unless authorised by Volkswagen AG. Volkswagen AG does not guarantee or accept any liability with respect to the correctness of information in this document. Copyright by Volkswagen AG.
satelettronica

39 - Final drive, Differential rear

1 - Checking oil in final drive

1.1 - Checking oil in final drive

1.2 - Vehicles without sealing plug in final drive cover

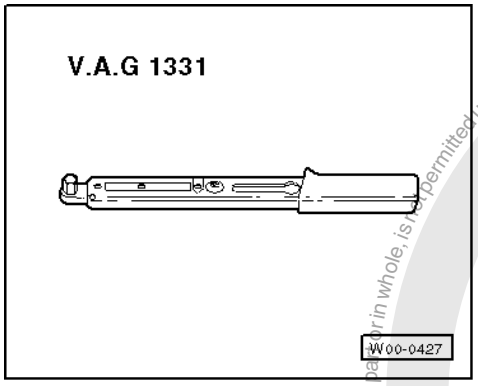

Special tools, workshop equipment, testers, measuring instruments and auxiliary items required

- V.A.G 1331 Torque wrench

Conditions for performing check

- Vehicle level

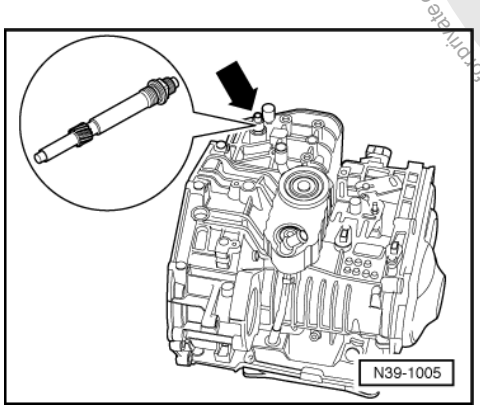

- Final drive oil level is checked with gearbox installed.

-> Location: speedometer drive shaft -arrow- is located on top of gearbox.

Protected by copyright. Copying for private or commercial purposes, in part or in whole, is not permitted unless authorised by Volkswagen AG. Volkswagen AG does not guarantee or accept any liability with respect to the correctness of information in this document. Copyright by Volkswagen AG.
satelettronica

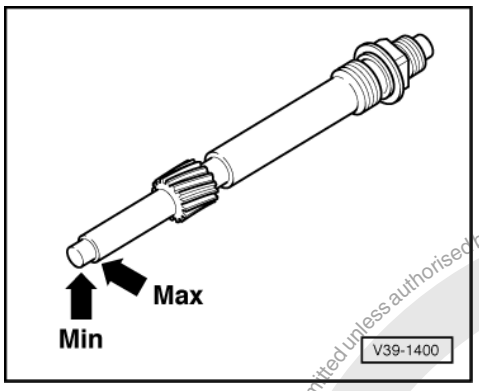

-> The difference between Min. and Max. is 0.1 litres. Excess oil can be drawn off using extraction system V.A.G 1358 A.

Checking:

- Remove speedometer drive shaft and clean using a cloth.
- Install and remove speedometer drive shaft and if necessary correct oil level.
- Final drive oil level must be between Min./Max.

Specification and capacity of final drive => Page 6

- Install speedometer drive shaft and tighten=> 244 , 1 - speedometer drive shaft.

1.3 - Vehicles with sealing plug in final drive cover

Conditions for performing check

- Vehicle level
- Final drive oil level is checked with gearbox installed.

Checking:

- Remove noise insulation -arrows-.

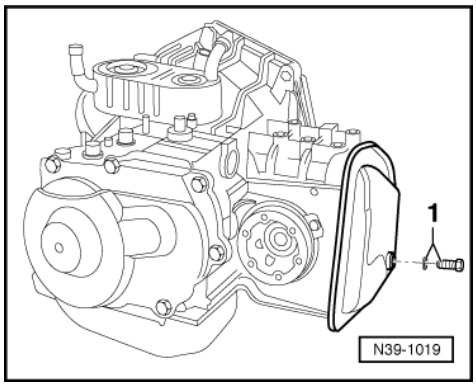

- -> Remove sealing plug -1-.

The oil level is correct when the front final drive is full to the lower edge of the filler hole.

- Allow excess gear oil to pour out or top up as necessary.

Specification and capacity of final drive => Page 6

- If the oil level is OK, renew front final drive sealing plug -1- => page 251 , 36 -Sealing plug.

Protected by copyright. Copying for private or commercial purposes, in part or in whole, is not permitted unless authorised by Volkswagen AG. Volkswagen AG does not guarantee or accept any liability with respect to the correctness of information in this document. Copyright by Volkswagen AG.
satelettronica

- Install noise insulation.

2 - Renewing oil seals for flanged shafts

2.1 - Renewing oil seals for flanged shafts

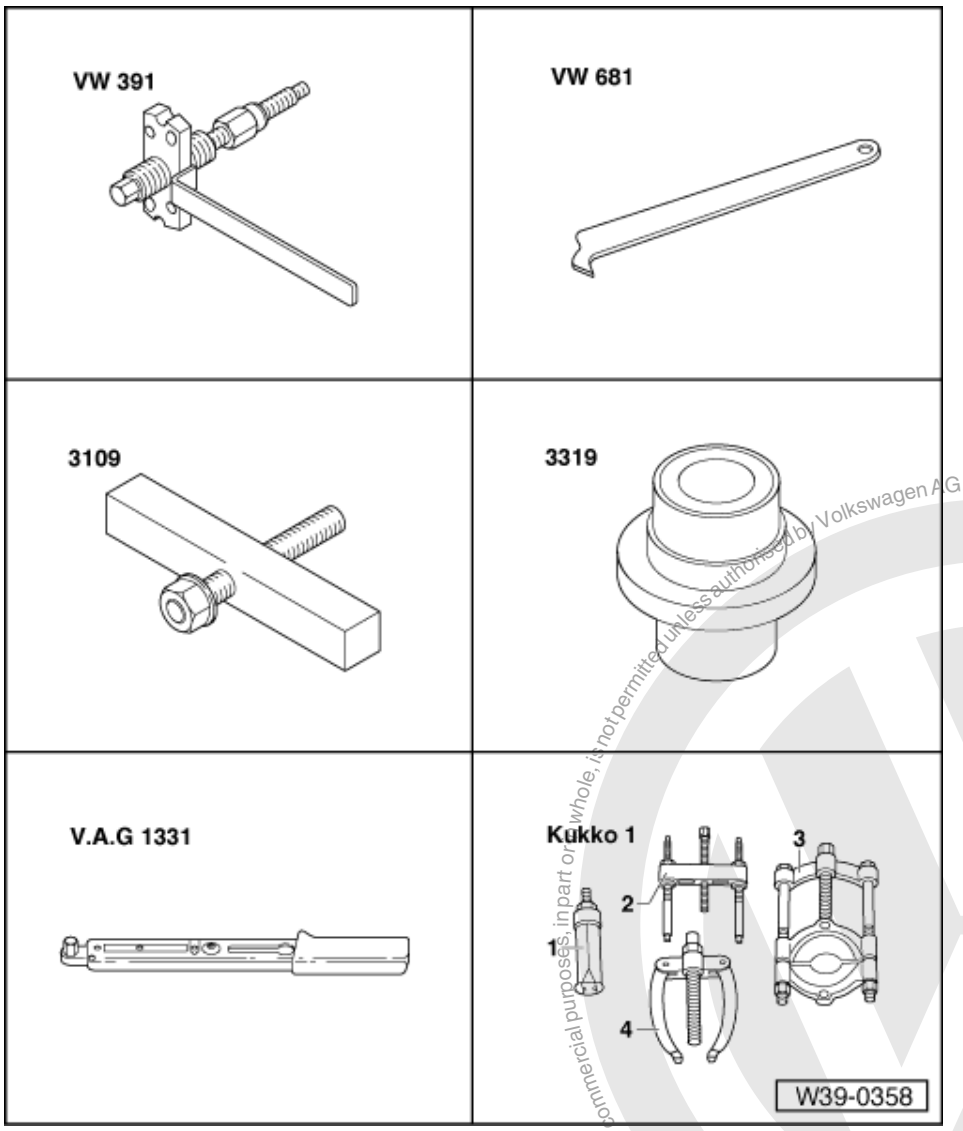

- Observe general repair instructions=> page 13 .

Special tools, workshop equipment, test and measuring appliances and auxiliary items required

- VW 391 Drive shaft fitting appliance
- VW 681 Oil seal extractor
- 3109 Puller
- 3319 Thrust piece
- V.A.G 1331 Torque wrench
- 2 - Kukko 18/0 Puller

Additional information required

- Workshop manual Caddy 1996 ‣, Polo Classic 1996 ‣, Polo estate 1998 ‣ Running gear, axles, steering

Protected by copyright. Copyright by Volkswagen AG. Volkswagen AG does not guarantee or accept any liability with respect to the correctness of information in this document. Copyright by Volkswagen AG. Copying for private or commercial purposes, in part or whole, is not permitted unless authorised by Volkswagen AG.
satelettronica

Removing right oil seal

- Remove wheel.

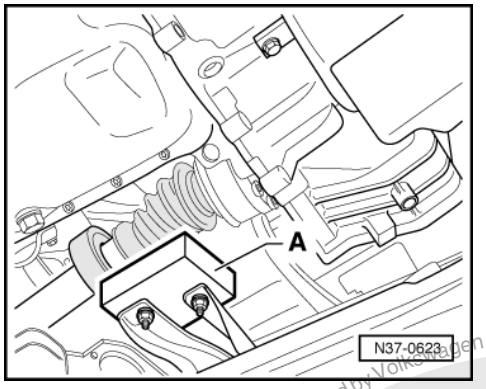

- Remove noise insulation -arrows-.
- -> Remove vibration damper -A- from sub-frame. Mark installation position.
- Disconnect drive shaft from flanged shaft.

=> Running gear, axles, steering; Repair group 40; Servicing driveshafts; Removing and installing driveshafts Servicing driveshafts Removing and installing driveshafts

- Lift drive shaft and secure to suspension strut with wire.

Vehicles with constant velocity joint shafts

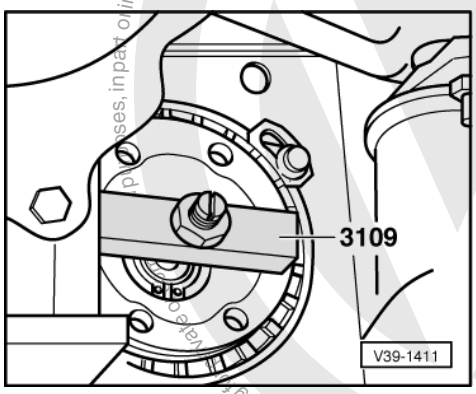

- Pierce sealing cap in flanged shaft with a screwdriver and lever out.
- -> Remove circlip and set up pulling device.

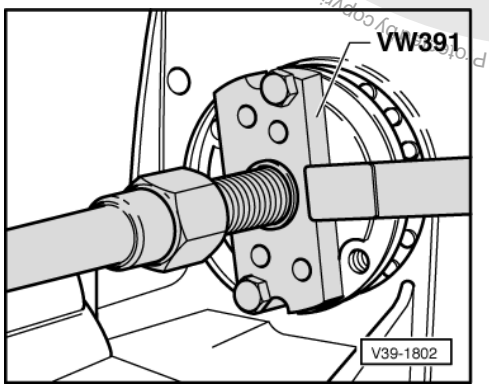

- -> Pull off flanged shaft using VW 391.
- Pull out flange shaft oil seal using oil seal extractor VW 681.

satelettronica

Vehicles with triple roller drive shafts:

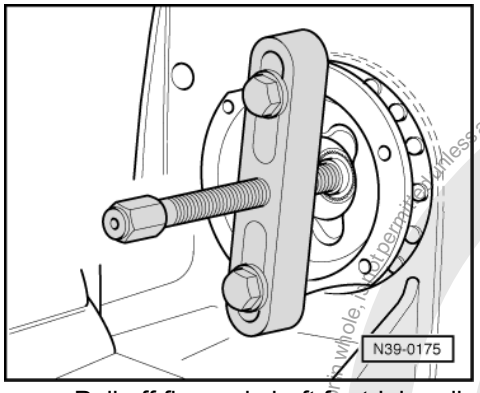

- -> Pull off flanged shaft for triple roller drive shaft.
- Bolt puller Kukko 18-0 using two 8x35 mm bolts and 8 mm ø washers to flange.
- Pull out flange shaft oil seal using oil seal extractor VW 681.

Installing right oil seal

- Apply gear oil to circumference and sealing lips of seal.
- Half fill space between sealing lip and dust lip with grease G 052 128 A1.

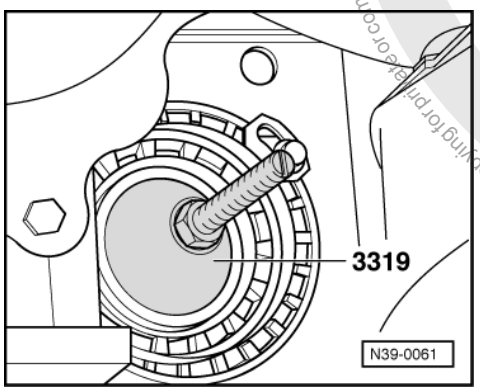

Installation position:

Open side of seal faces gearbox.

- -> Pull new oil seal in onto stop with press piece 3319, M10 threaded rod (approx. 80 mm long) and nut with washer.
- Insert flanged shaft, dished washer and circlip.

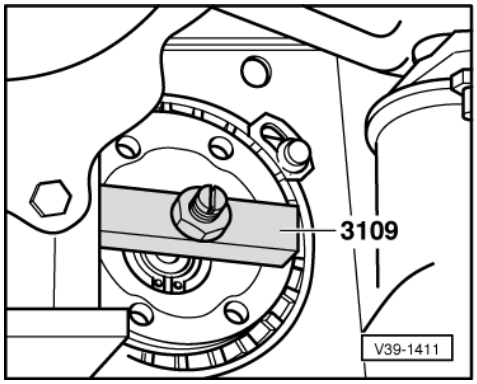

- -> Pull in flanged shaft.

Protected by copyright. Copying for private or commercial purposes, in whole or in part, is not permitted unless authorised by Volkswagen AG. Volkswagen AG does not guarantee or accept any liability with respect to the correctness of information in this document. Copyright by Volkswagen AG.
satelettronica

Flanged shaft can also be pulled in using VW 391.

Vehicles with constant velocity joint shafts

- Install circlip and seal drive flange with cover.

Continued for all vehicles

- Install drive shaft.

=> Running gear, axles, steering; Repair group 40; Servicing driveshafts; Removing and installing driveshafts Servicing driveshafts Removing and installing driveshafts

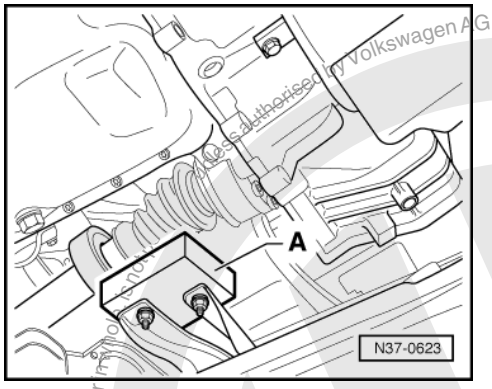

- -> Bolt vibration damper -A- to subframe.

=> Running gear, axles, steering; Repair group 40; Servicing front suspension; Overview, subframe, anti-roll bar, wishbones Servicing front suspension Overview, subframe, anti-roll bar, wishbones

Fitting position: Install the side with the greater length from edge to holes facing direction of travel.

- With gearbox installed, check final drive oil level => page 214 .
- Install noise insulation.
- Fit wheel.

=> Running gear, axles, steering; Repair group 40; Servicing front suspension; II - Servicing wheel bearings Servicing front suspension II - Servicing wheel bearings

Removing left oil seal

- Remove wheel.

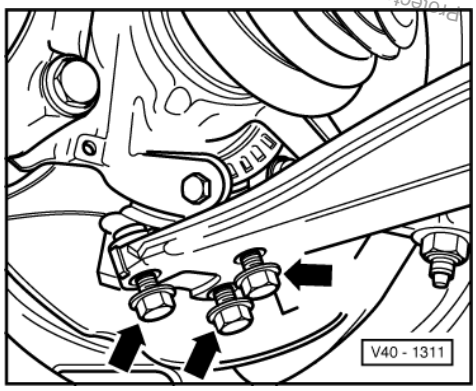

- Mark installation position of ball joint bolts on left-hand wishbone and remove bolts.
- -> Remove bolts (arrows).
- Remove left-hand drive shaft.

Protected by copyright. Copying for private or commercial purposes, in part or in whole, is not permitted unless authorised by Volkswagen AG. Volkswagen AG does not guarantee or accept any liability with respect to the correctness of information in this document. Copyright by Volkswagen AG.
satelettronica

=> Running gear, axles, steering; Repair group 40; Servicing driveshafts; Removing and installing driveshafts
Servicing driveshafts Removing and installing driveshafts

Protected by copyright. Copyright by Volkswagen AG. Volkswagen AG does not guarantee or accept any liability with respect to the correctness of information in this document. Copyright by Volkswagen AG. Reproduction, in part or in whole, is not permitted unless authorised by Volkswagen AG.

Vehicles with constant velocity joint shafts

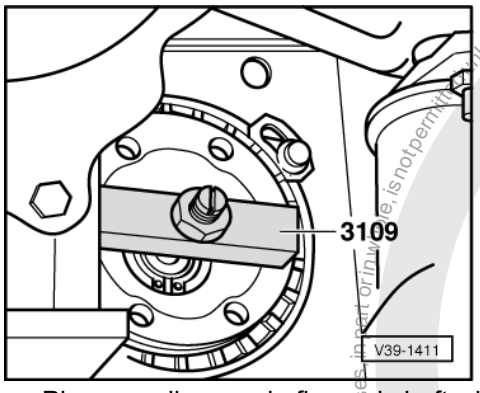

- Pierce sealing cap in flanged shaft with a screwdriver and lever out.
- -> Remove circlip, set up pulling device.

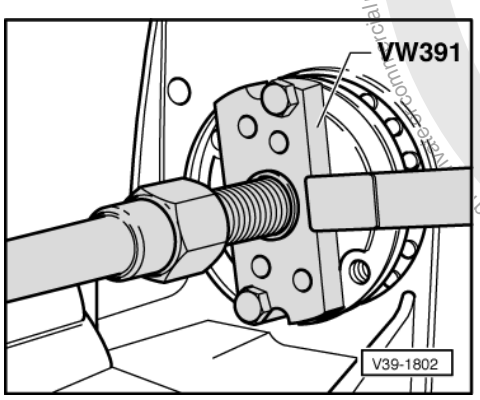

- -> Pull off flanged shaft using VW 391.
- Pull out flange shaft oil seal using oil seal extractor VW 681.

Vehicles with triple roller drive shafts:

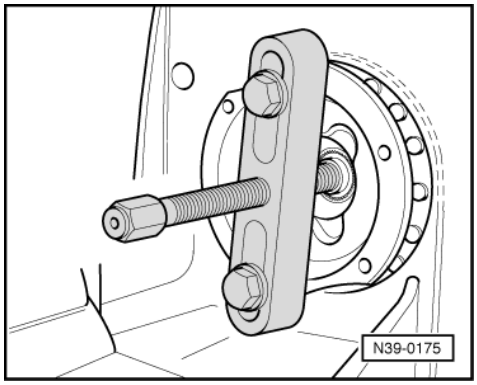

- -> Pull off flanged shaft for triple roller drive shaft.
- Bolt puller Kukko 18-0 using two 8x35 mm bolts and 8 mm ø washers to flange.
- Pull out flange shaft oil seal using oil seal extractor VW 681.

Installing left oil seal

- Apply gear oil to circumference and sealing lips of seal.
- Half fill space between sealing lip and dust lip with grease G 052 128 A1.

satelettronica

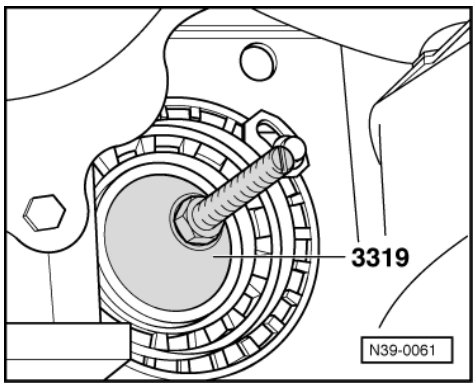

Installation position:

Open side of seal faces gearbox.

- -> Pull new oil seal in onto stop with press piece 3319, M10 threaded rod (approx. 80 mm long) and nut with washer.
- Insert flanged shaft, dished washer and circlip.

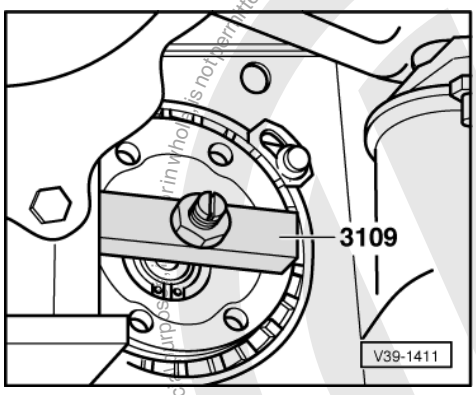

- -> Pull in flanged shaft.

Flanged shaft can also be pulled in using VW 391.

Vehicles with constant velocity joint shafts

- Install circlip and seal drive flange with cover.

Continued for all vehicles

- Install drive shaft.

=> Running gear, axles, steering; Repair group 40; Servicing driveshafts; Removing and installing driveshafts Servicing driveshafts Removing and installing driveshafts

- Install wishbone with ball joint using new securing plate and bolts.
- Tighten new bolts at markings for old bolts.

=> Running gear, axles, steering; Repair group 40; Removing and installing wishbone Removing and installing wishbone

- With gearbox installed, check final drive oil level => page 214 .
- Install noise insulation.
- Fit wheel.

=> Running gear, axles, steering; Repair group 40; Servicing front suspension; II - Servicing wheel bearings Servicing front suspension II - Servicing wheel bearings

Protected by copyright. Copyright by Volkswagen AG. Volkswagen AG does not guarantee or accept any liability with respect to the correctness of information in this document. Copyright by Volkswagen AG. Copying for private or commercial purposes, in whole or in part, is not permitted unless authorised by Volkswagen AG.
satelettronica

3 - Dismantling and assembling final drive

3.1 - Dismantling and assembling final drive

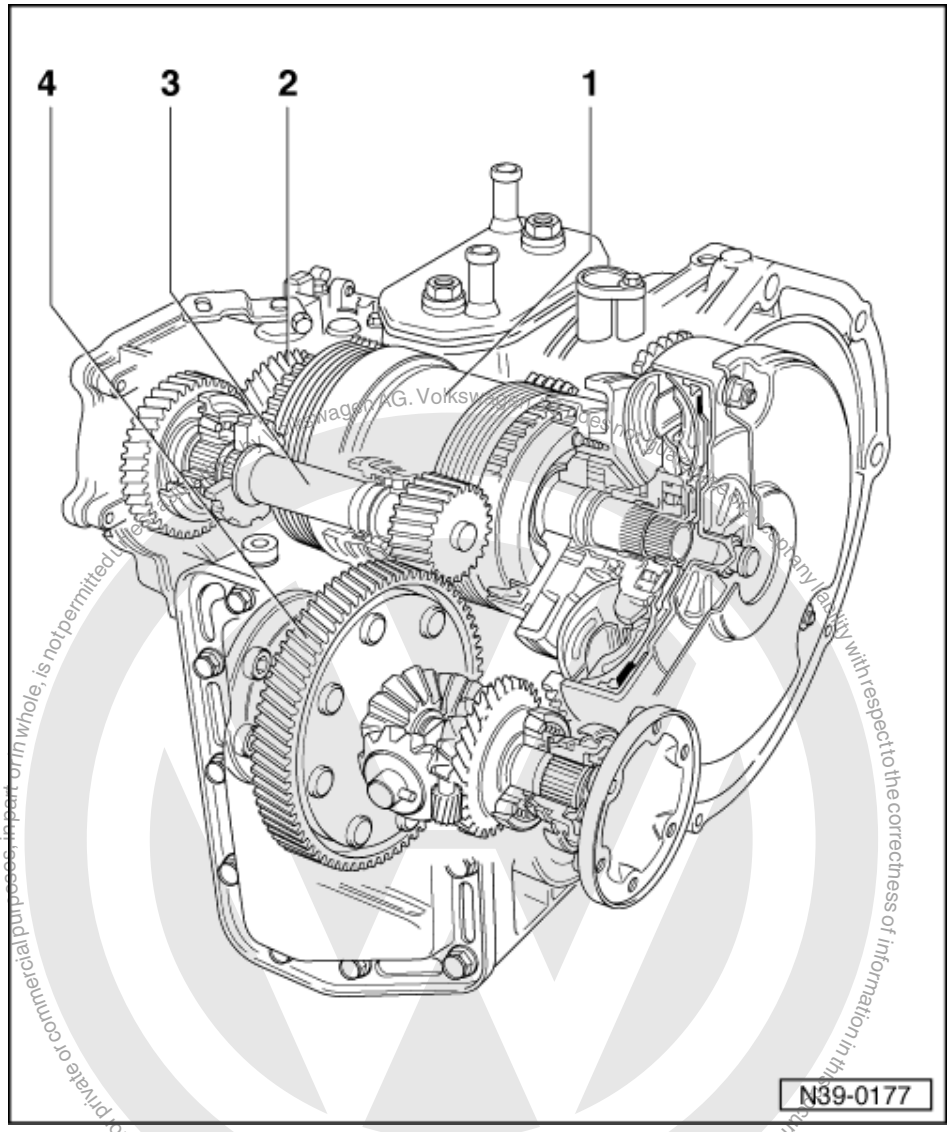

3.2 - Repair overview of final drive

1 Planetary gear
- Dismantling and assembling => Page 82

2 Input gear
- Removing and installing => Page 224
- Adjusting => Page 271
- Adjusting final drive (overview) =>Page 266
- Repairs on the input gear can only be performed once the individual components of the planetary gearbox have been removed.

satelettronica

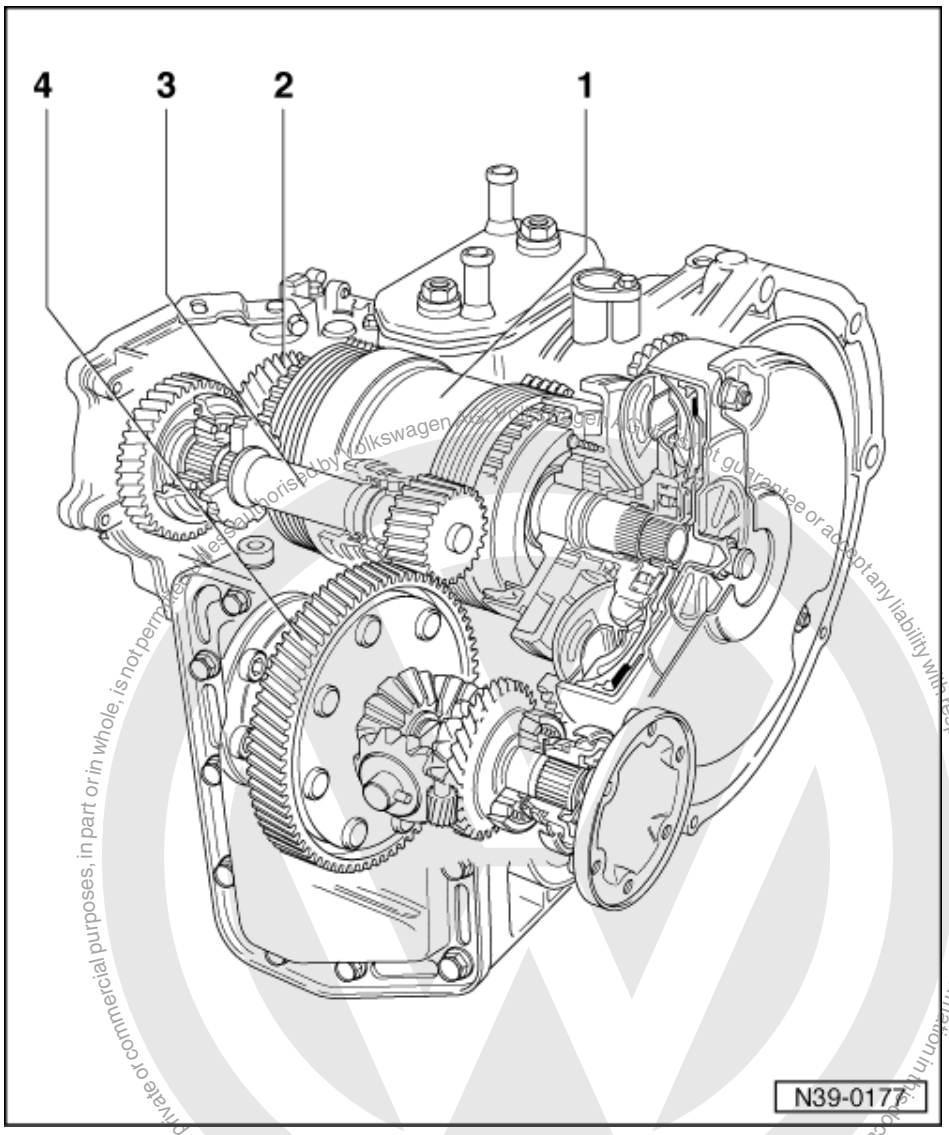

3 Drive pinion
- Removing and installing => Page 232
- Adjusting => Page 269
- Adjusting final drive (overview) => Page 266

4 Differential
- Removing and installing => Page 243
- Dismantling and assembling => Page 254
- Adjusting => Page 273
- Adjusting final drive (overview) => Page 266

satelettronica

3.3 - Removing and installing input gear

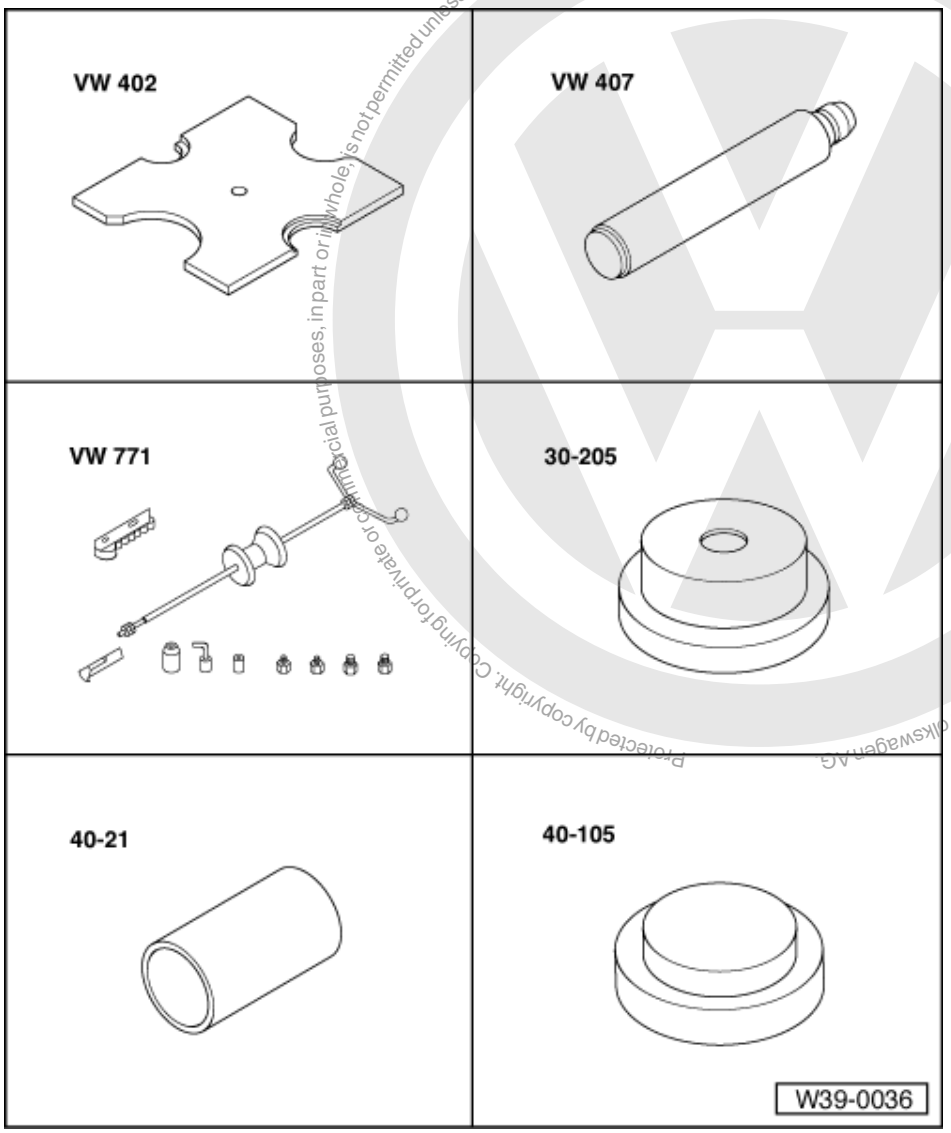

Protected by copyright. Copying for private or commercial purposes, in part or in whole, is not permitted unless authorised by Volkswagen AG. Volkswagen AG does not guarantee or accept any liability with respect to the correctness of information in this document. Copyright by Volkswagen AG.

satelettronica

Special tools, workshop equipment, test and measuring appliances and auxiliary items required

- VW 402 Thrust plate
- VW 407 Press tool
- VW 771 Multi-purpose tool
- 30-205 Thrust plate
- 40-21 Press tool
- 40-105 Thrust plate

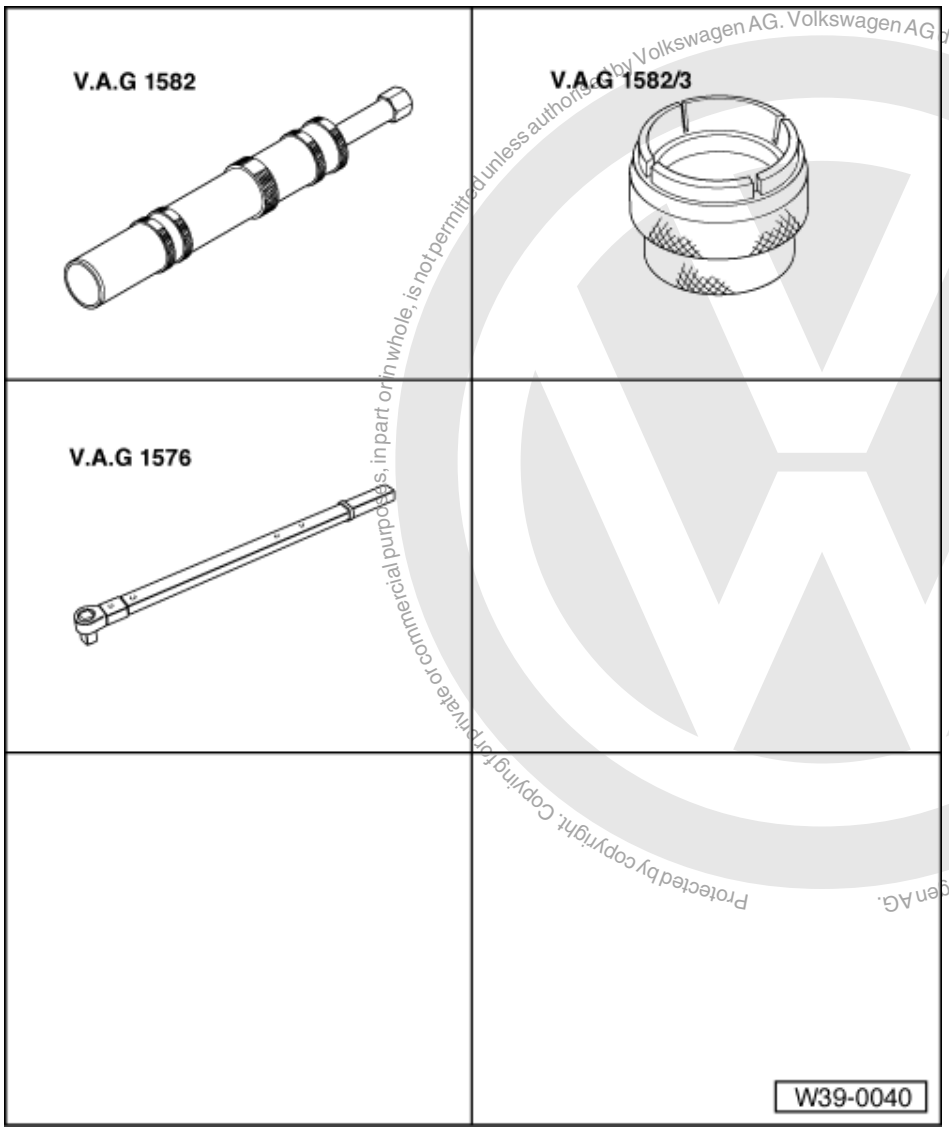

Protected by copyright. Copyright by Volkswagen AG. Volkswagen AG does not guarantee or accept any liability with respect to the correctness of information in this document. Copying for private or commercial purposes, in part or in whole, is not permitted unless authorised by Volkswagen AG.

satelettronica

Special tools, workshop equipment, test and measuring appliances and auxiliary items required

- V.A.G 1582 Taper roller bearing puller
- V.A.G 1582/3 Grip
- V.A.G 1576 Torque wrench

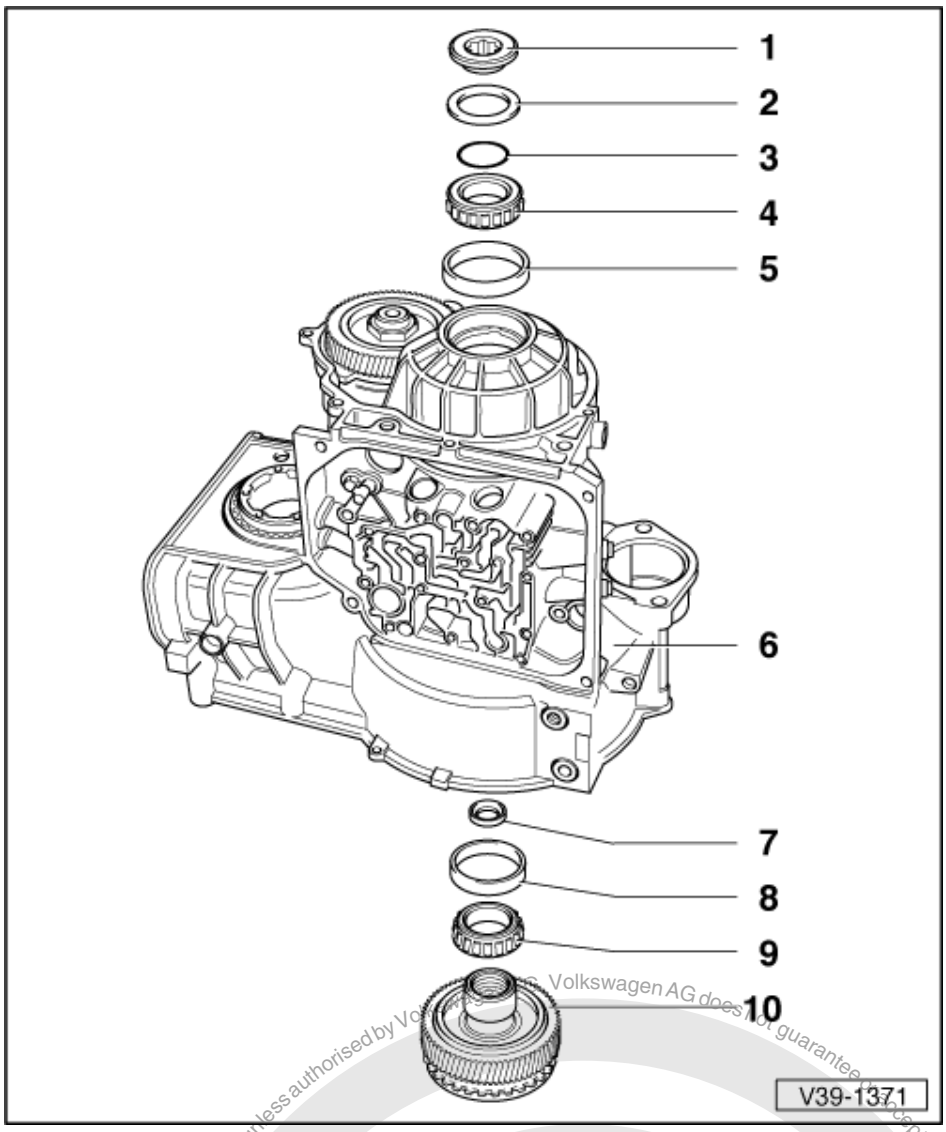

- Observe general repair instructions=> page 13 .

- The planetary gearbox must be removed before the input gear can be removed => 82 .
- The drive pinion and differential do not need to be removed.

1) When replacing these parts, adjustment work is necessary => Adjustment overview on page 268 .

1 Socket head fastener, 250 Nm
- Engage parking lock to remove and install
- Removing and installing => Fig. 5
- Before installing socket head fastener insert axial needle bearing (item 7)

2 Dished washer
- Curved side faces socket head fastener

satelettronica

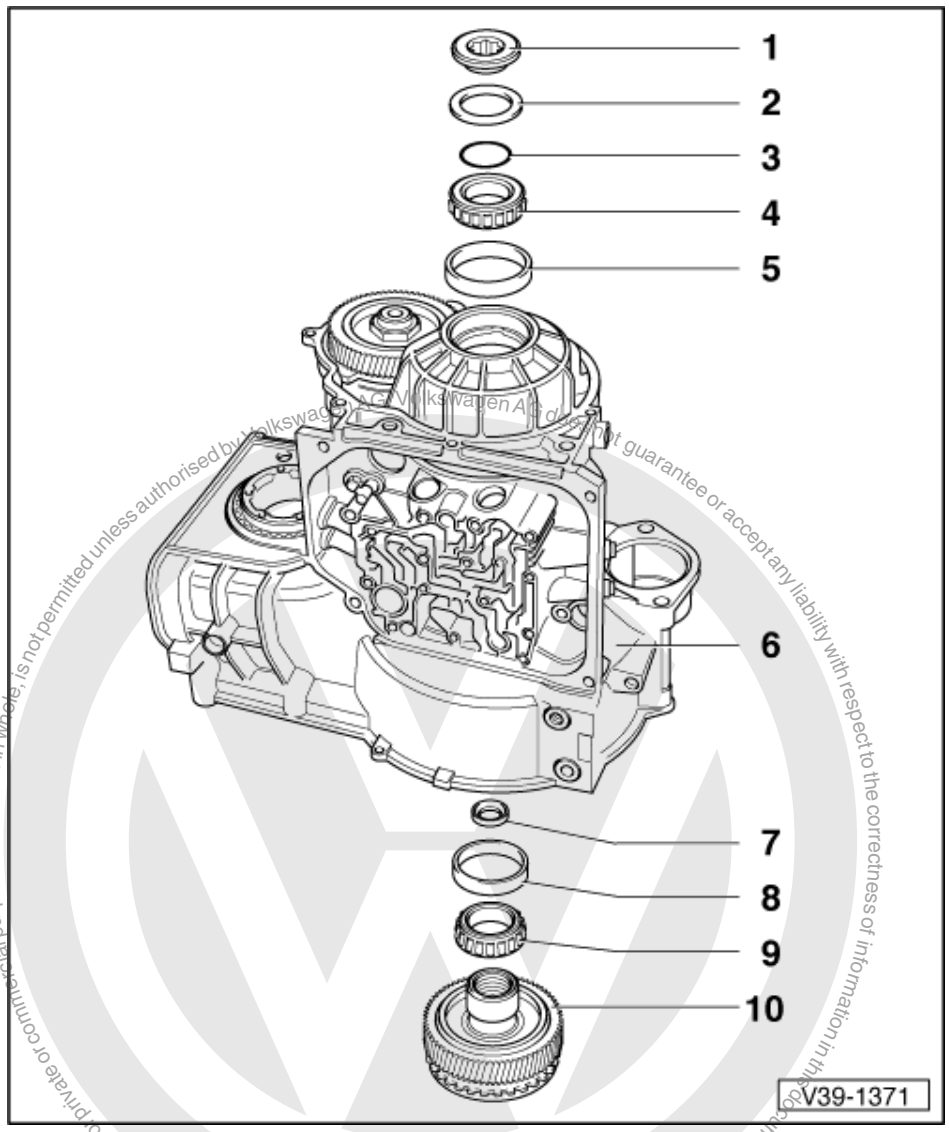

3 Shim
- Determining thickness => Adjusting input gear, Page 271

4 Taper roller bearing inner race1)
- After measuring thickness of shim, fit onto input gear with locking fluid AMV 185 101 A1

5 Taper roller bearing outer race1)
- Drive out with drift
- Drive in with 30-205
- Insert with locking fluid AMV 185 101 A1

6 Gearbox housing1)

7 Axial needle bearing
- Install with flat side facing input gear
- Insert into input gear before installing socket head fastener (item 1)

satelettronica

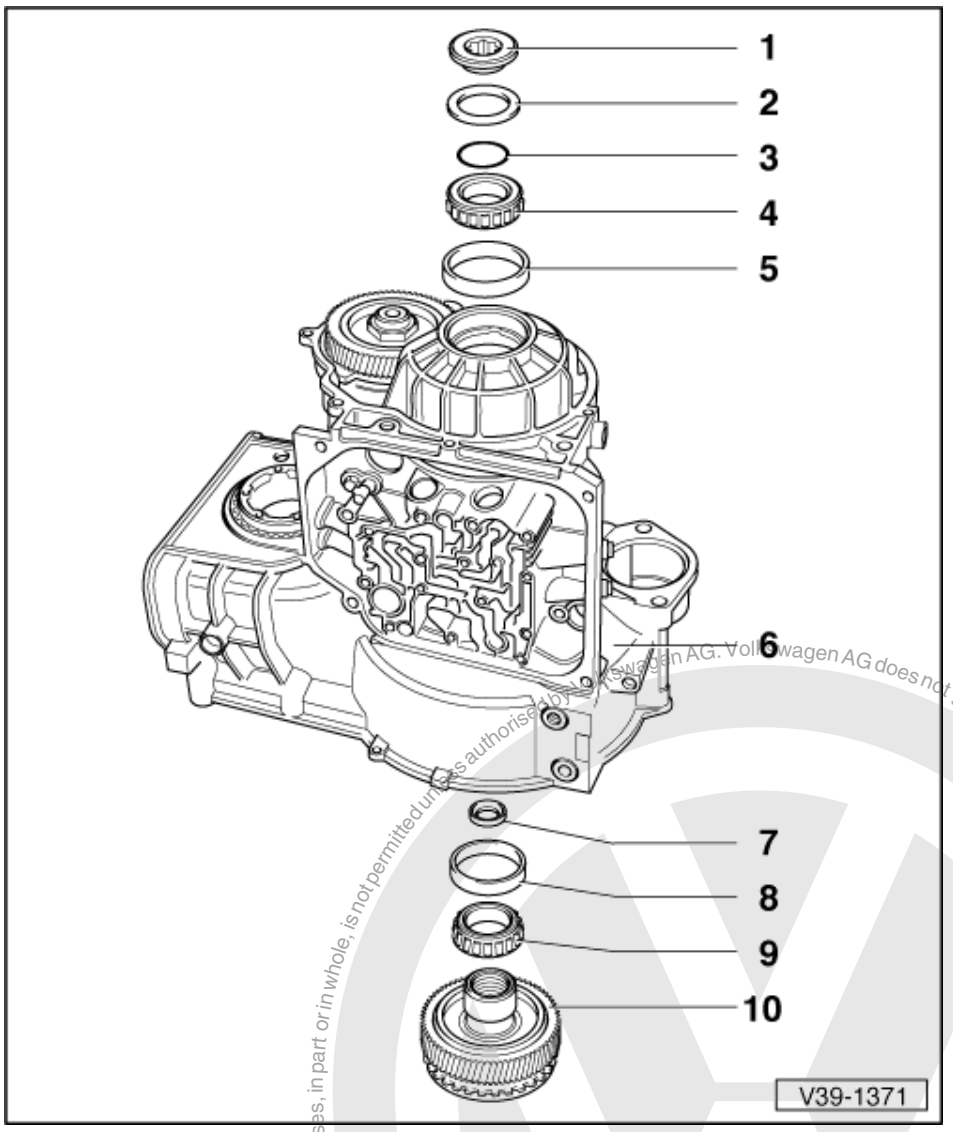

8 Taper roller bearing outer race1)

- Drive out with drift
- Drive in with 30-205 and appropriately long drift
- Insert with locking fluid AMV 185 101 A1

9 Taper roller bearing inner race1)

- Remove together with input gear -item 10 -
- Pulling off => Fig. 1
- Pressing on =>Fig. 2
- Insert with locking fluid AMV 185 101 A1
- To install, drive onto input gear -item 10 - a few millimetres, then draw in via socket head fastener

Copyright by Volkswagen AG. Volkswagen AG does not guarantee or accept any liability with respect to the correctness of information in this document. Copyright by Volkswagen AG. Protected by copyright. Copying for private or commercial purposes, in part or in whole, is not permitted unless authorised by Volkswagen AG.
satelettronica

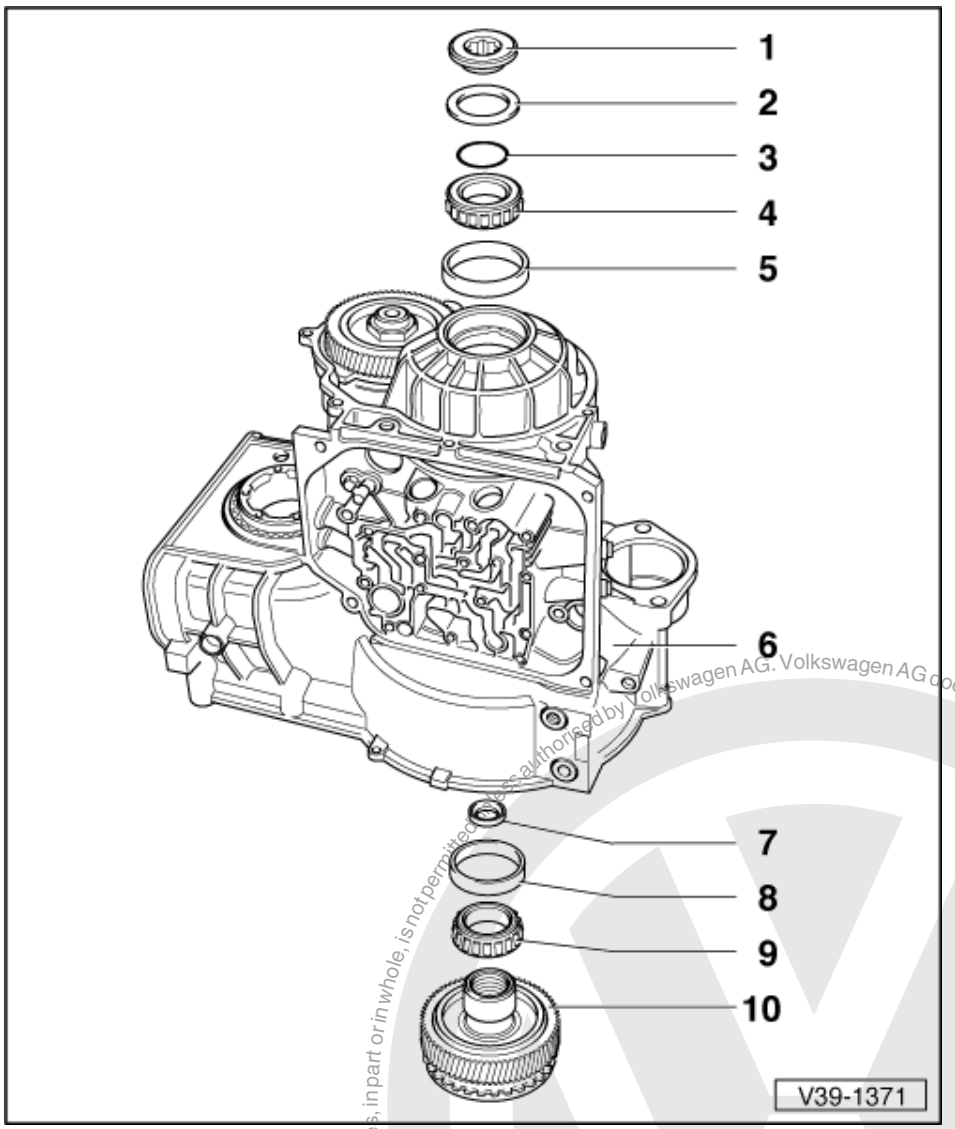

10 Input gear1)

- With impulse wheel for road speed sender -G68-
- Removing => Fig. 3
- Number of teeth => Page 3
- Adjusting =>Page 271
- If signs of damage exist, always replace input gear and output gear together
- If input gear is renewed, adjust planet carrier => Page 133 .

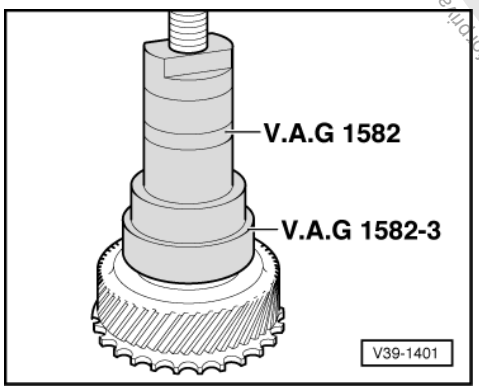

Protected by copyright. Copying for private or commercial purposes, in part or in whole, is not permitted unless authorised by Volkswagen AG. Volkswagen AG does not guarantee or accept any liability with respect to the correctness of information in this document. Copyright by Volkswagen AG.
satelettronica

-> Fig.1 Pulling off taper roller bearing inner race

- Place thrust plate 40-105 on input gear.

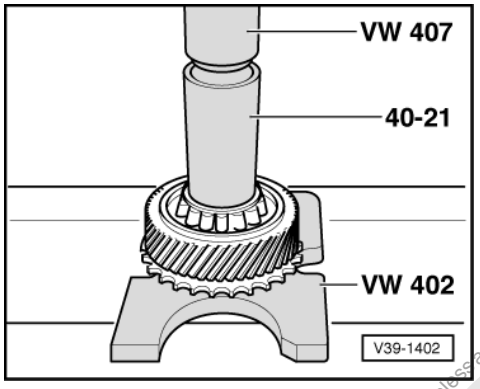

-> Fig.2 Pressing on taper roller bearing inner race

To avoid damage to input gear, a press piece must be placed under hub of input gear.

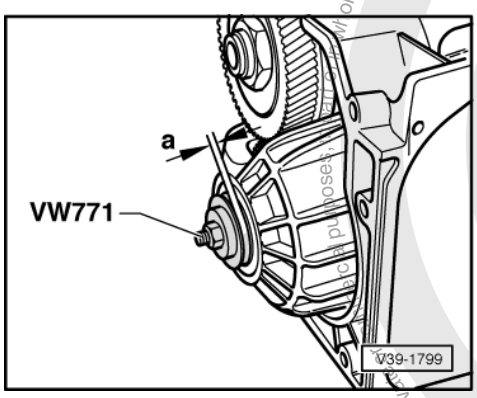

-> Fig.3 Removing input gear

- Insert socket head fastener without dished washer, shim and axial needle bearing far enough for a gap size a = 3 mm to exist between socket head fastener and taper roller bearing inner race.
- Drive out input gear with VW 771 as far as the stop of the taper roller bearing inner race.
- Remove VW 771 and take out input gear.

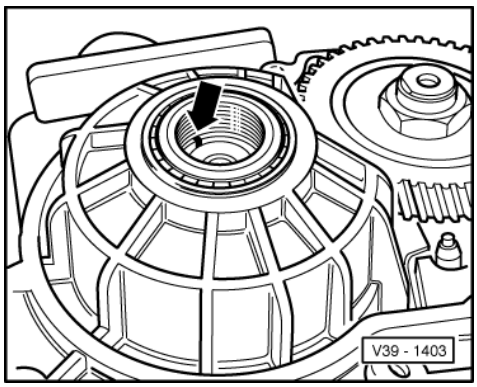

-> Fig.4 Inserting taper roller bearing inner race

- Insert taper roller bearing inner race with AMV 185 101 A1 -arrow-.

Protected by copyright. Copying for private or commercial purposes, in whole or in part, is not permitted unless authorised by Volkswagen AG. Volkswagen AG does not guarantee or accept any liability with respect to the correctness of information in this document. Copyright by Volkswagen AG.
satelettronica

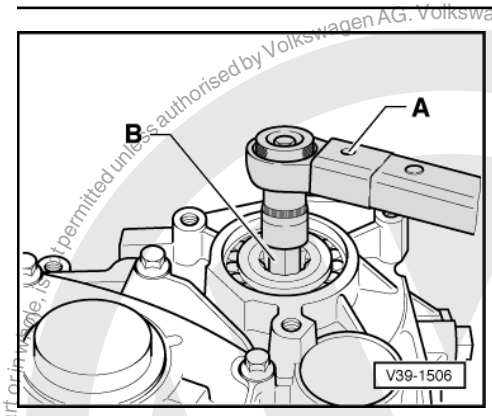

-> Fig.5 Removing and installing socket head fastener

A - Torque wrench
B - 22 mm AF socket insert
- Engage parking lock to loosen and tighten.

3.4 - Removing and installing drive pinion

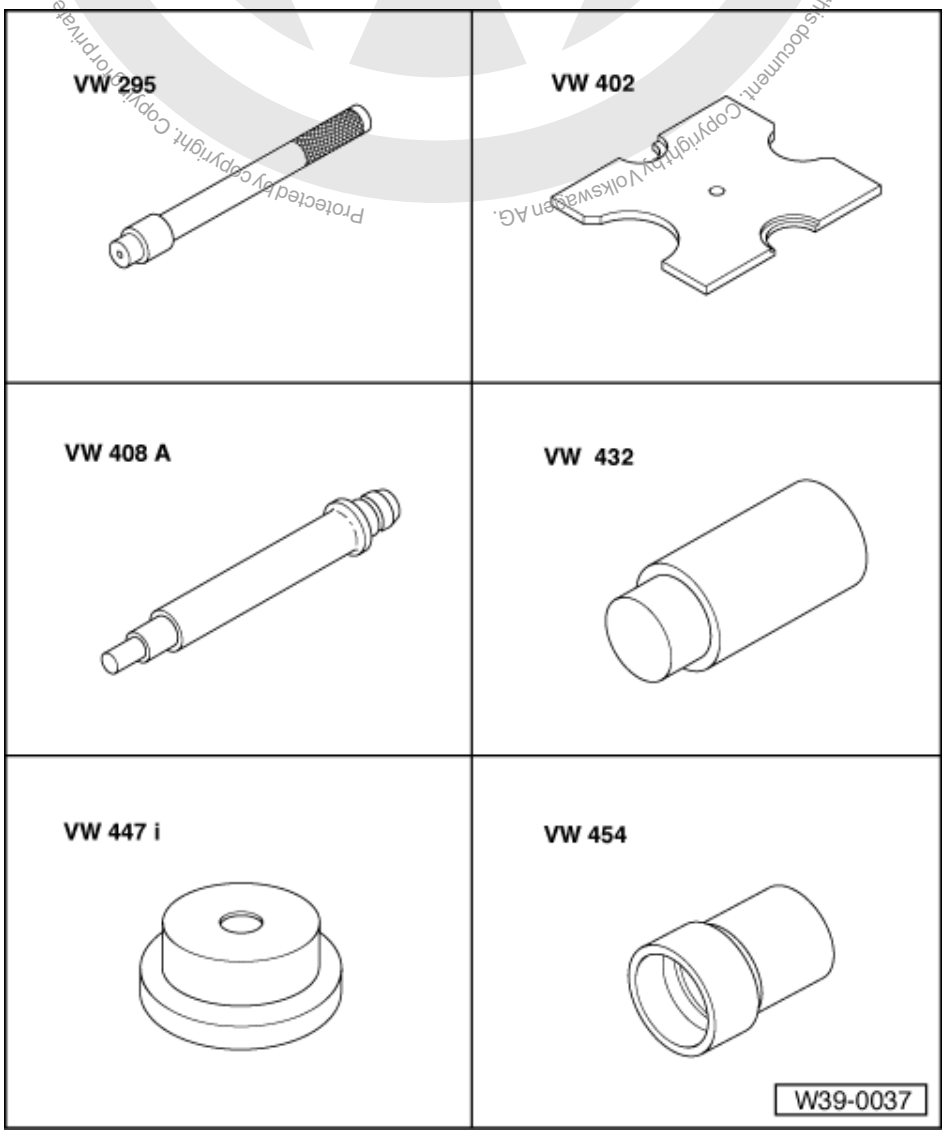

Volkswagen AG. Volkswagen AG does not guarantee or accept any liability with respect to the correctness of information in this document. Copyright by Volkswagen AG. Protected by copyright. Copying for private or commercial purposes, in part or in whole, is not permitted unless authorised by Volkswagen AG.
satelettronica

Special tools, workshop equipment, test and measuring appliances and auxiliary items required

- VW 295 Drift
- VW 402 Thrust plate
- VW 408 A Press tool
- VW 432 Press piece
- VW 447 i Thrust plate
- VW 454 Press piece

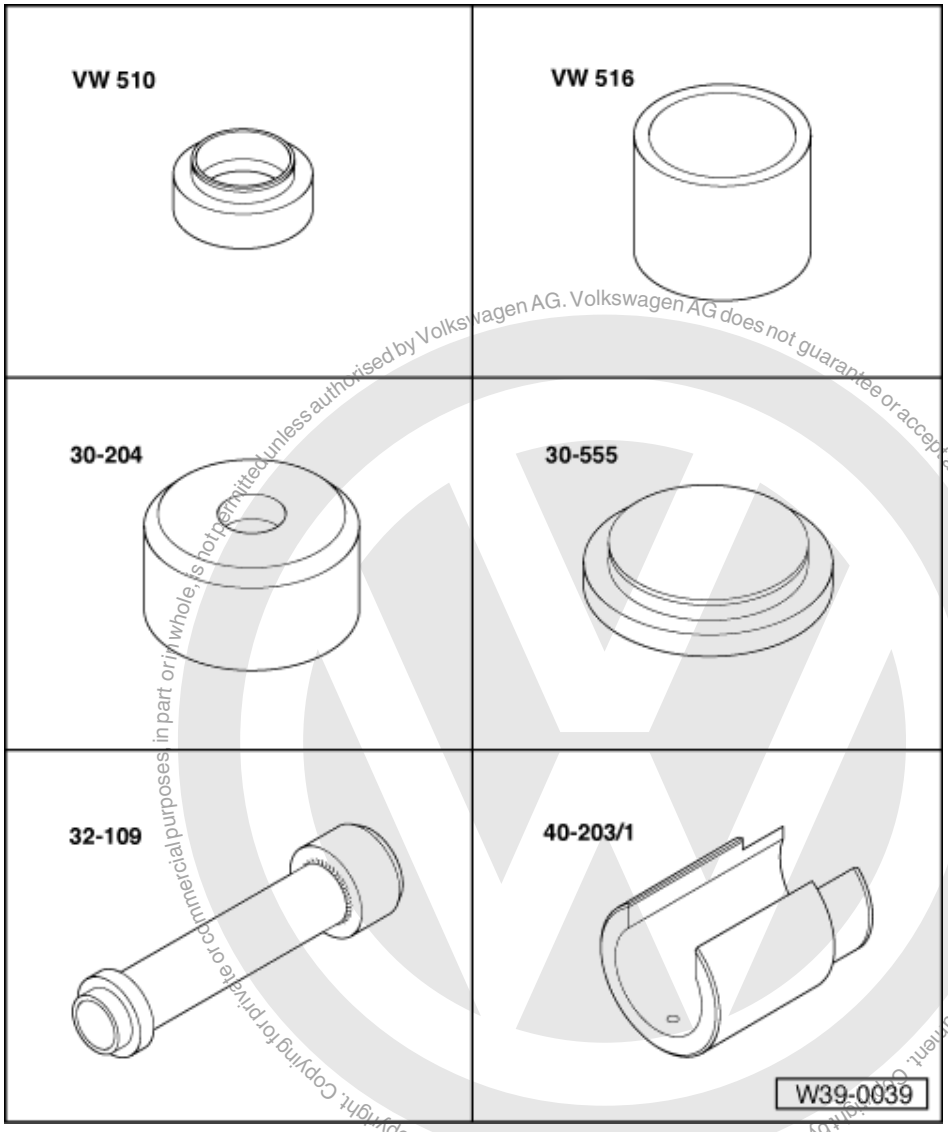

Reproduced by copyright. Copying for private or commercial purposes, in part or in whole, is not permitted unless authorised by Volkswagen AG. Volkswagen AG does not guarantee or accept any liability with respect to the correctness of information in this document. Copyright by Volkswagen AG.

Special tools, workshop equipment, test and measuring appliances and auxiliary items required

- VW 510 Press piece
- VW 516 Tube
- 30-204 Installing ring
- 30-555 Thrust piece
- 32-109 Tube
- 40-203/ 1 Tube, split

satelettronica

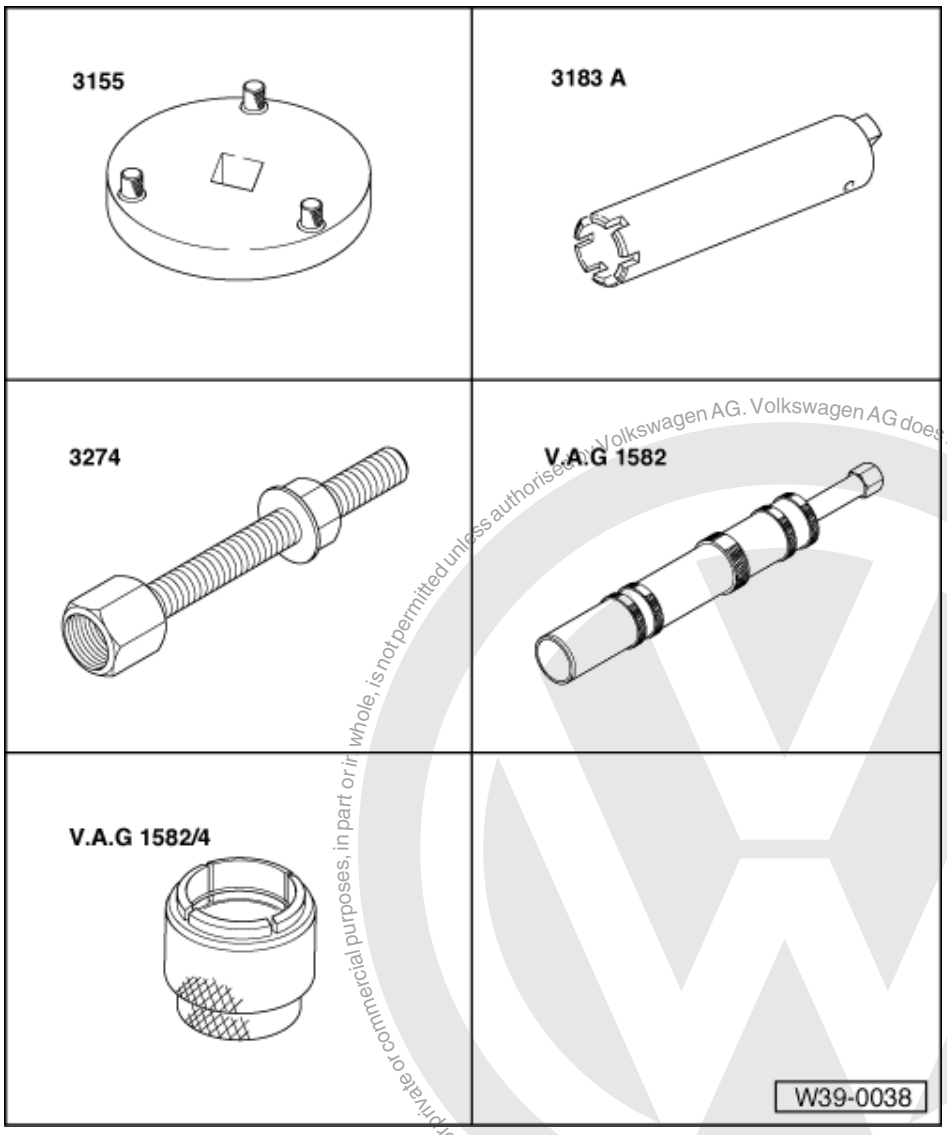

Protected by copyright. Copying for private or commercial purposes, in part or in whole, is not permitted unless authorised by Volkswagen AG. Volkswagen AG does not guarantee or accept any liability with respect to the correctness of information in this document. Copyright by Volkswagen AG.

satelettronica

Special tools, workshop equipment, test and measuring appliances and auxiliary items required

- 3155 Ring nut spanner
- 3183 A Castellated box spanner with guide sleeve 3183 A/1
- 3274 Adapter
- V.A.G 1582 Taper roller bearing puller
- V.A.G 1582/4 Grip
- 1 - Kukko 20/10 Two-arm puller
- 1 - Kukko 21/7 Internal puller
- 4 - Kukko 22/1 Counter-support
- V/172 Removal hook

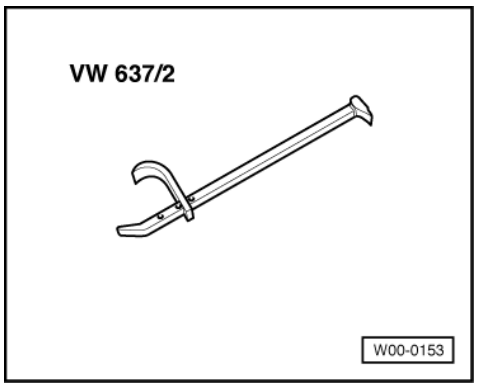

Special tools, workshop equipment, testers, measuring instruments and auxiliary items required

- VW 637/2 Hub cap puller

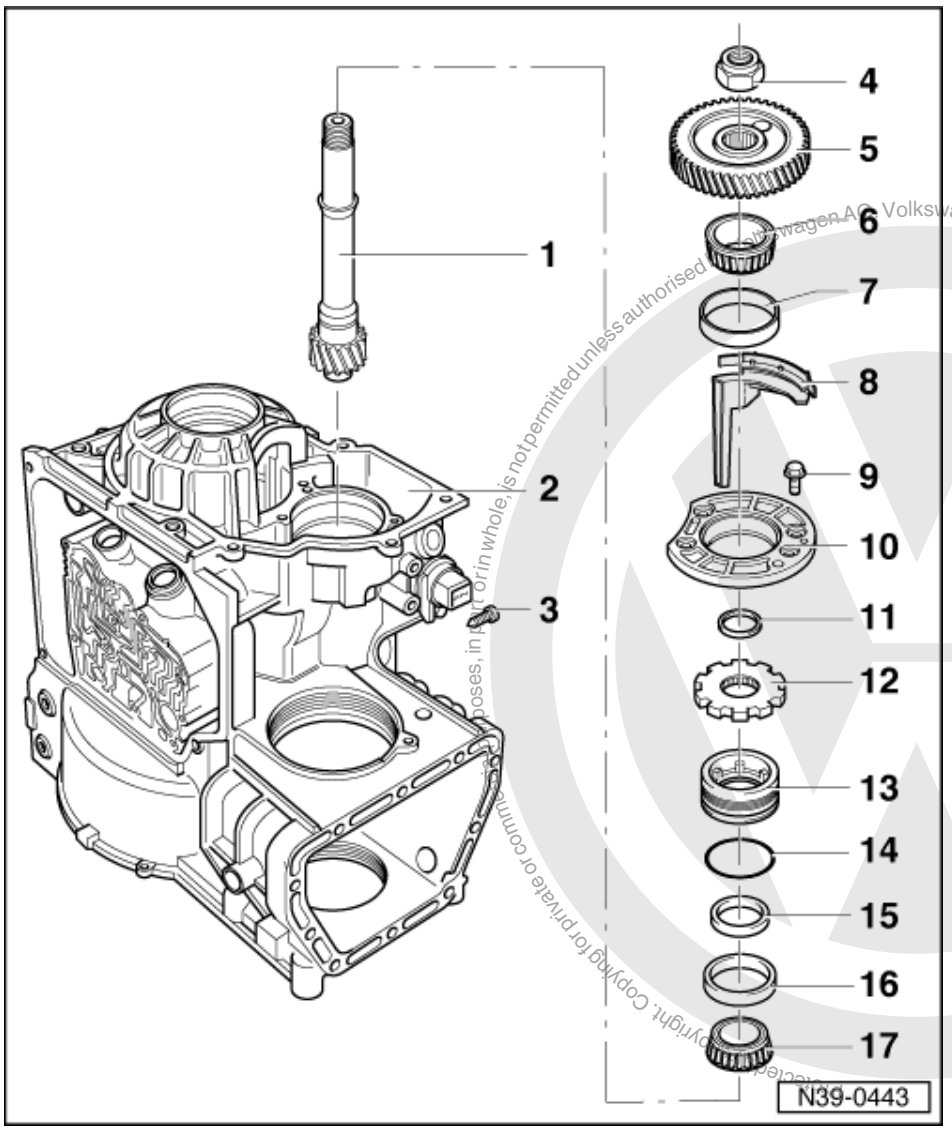

- Observe general repair instructions=> page 13 .

To remove drive pinion, first the parking lock gear must be removed and then the selector shaft => 203 , Dismantling and assembling parking lock.

satelettronica
Volkswagen AG does not guarantee or accept any liability with respect to the correctness of information in this document. Copyright by Volkswagen AG.

1) When replacing these parts, adjustment work is necessary => Adjustment overview on page 268 .

1 Drive pinion1)
- Number of teeth => from page 3
- Adjusting =>Page 269
- Removing => Fig. 9
- Is mated to crown wheel. Renew complete drive set if damaged.

2 Gearbox housing

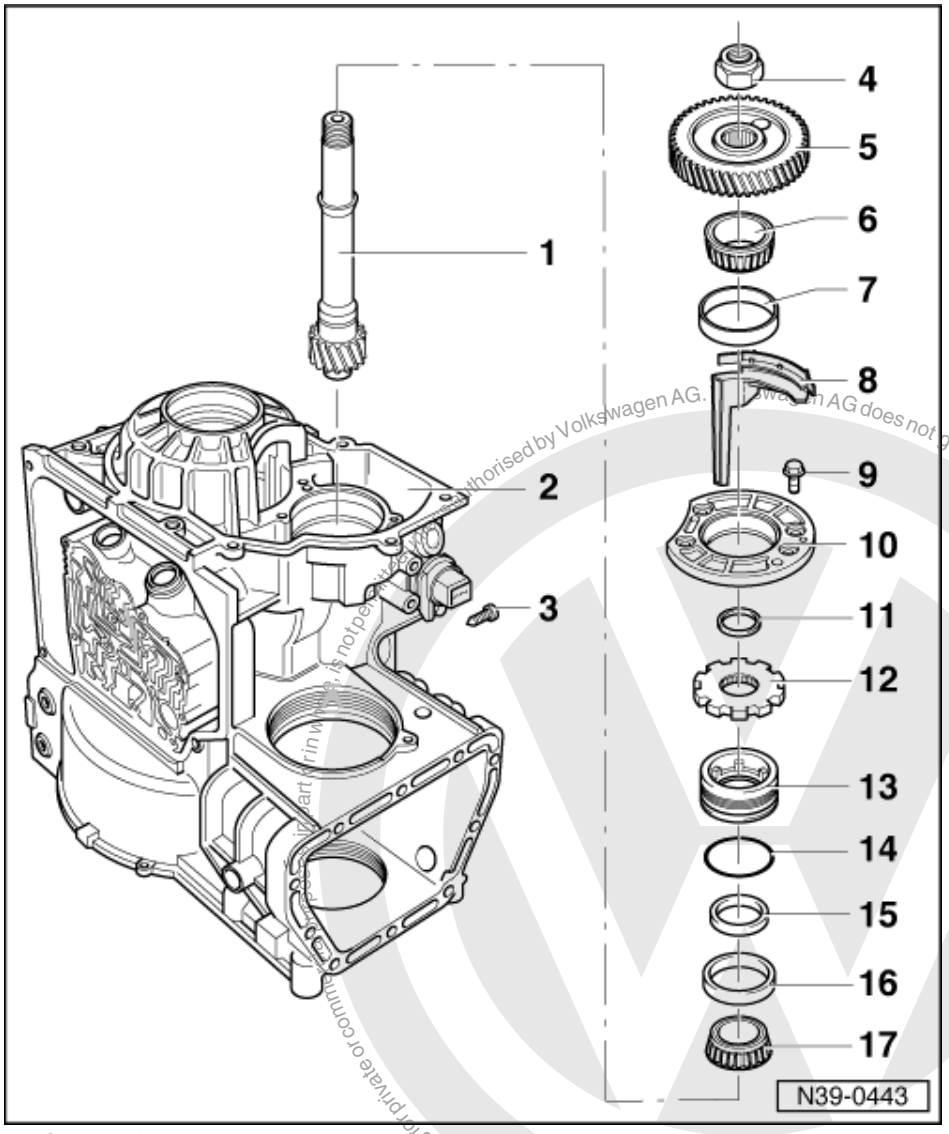

3 Screw, 12 Nm
- Remove screw before removing or installing bearing supporting ring -item 13 -
- Insert with sealing agent
  AKD 456 000 01

4 Hexagon nut, 250 Nm
- Engage parking lock to remove or install
- Secure with drift

5 Output gear1)
- Number of teeth =>from Page 3
- Pulling off => Fig. 1
- If signs of damage exist, always replace input gear and output gear together

6 Taper roller bearing inner race1)
- Pulling off => Fig. 2

Protected by copyright. Copying for private or commercial purposes, in part or in whole, is not permitted unless authorised by Volkswagen AG. Volkswagen AG does not guarantee or accept any liability with respect to the correctness of information in this document. Copyright by Volkswagen AG.
satelettronica

- Pressing on =>Fig. 3

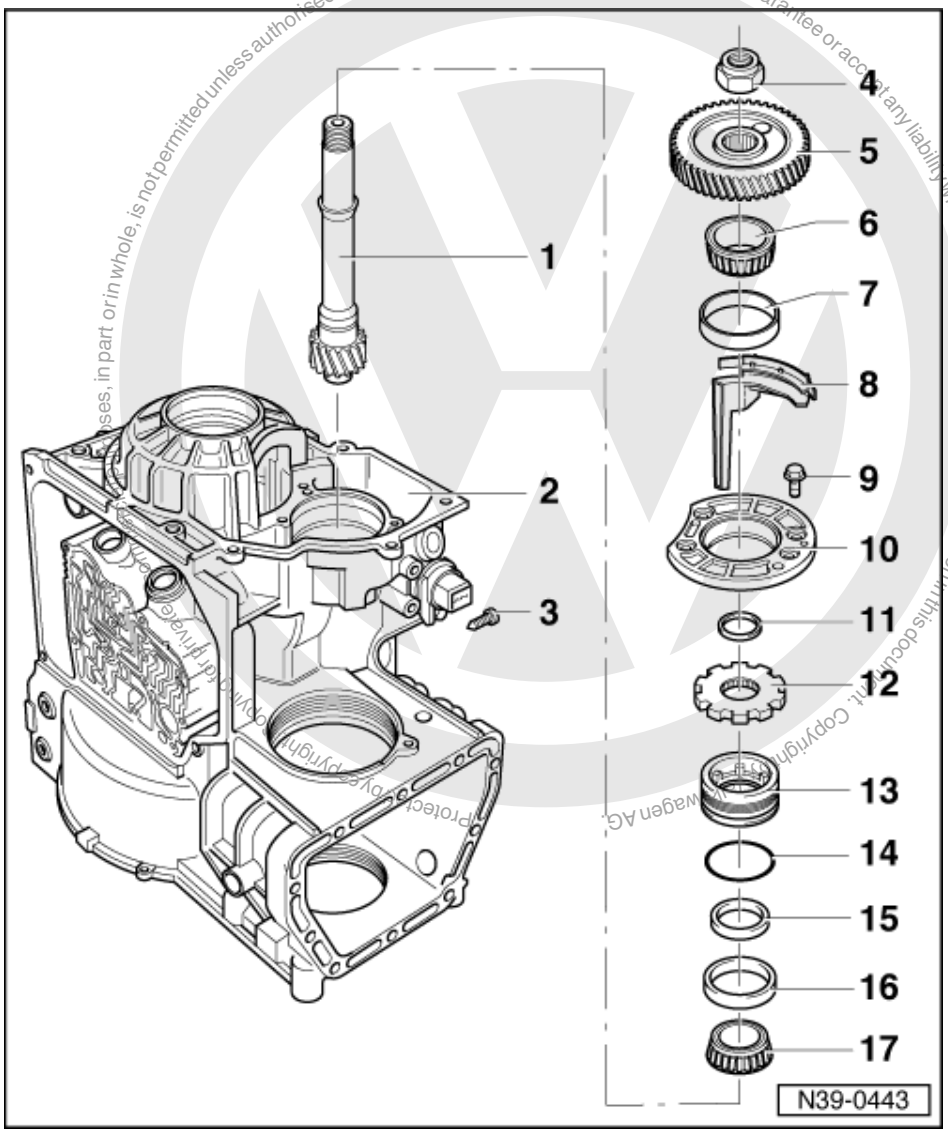

7 Taper roller bearing outer race1)
- Drive out with drift
- Removing => Fig. 4
- Pressing in =>Fig. 5

8 ATF oil deflector
- Install together with bearing cap (item 10)

9 Bolt, 25 Nm

10 Bearing cap1)

11 Shim
- Determining thickness
  => Page 269 , Adjusting drive pinion

12 Parking lock gear1)
- Rounded side faces teeth of drive pinion

satelettronica

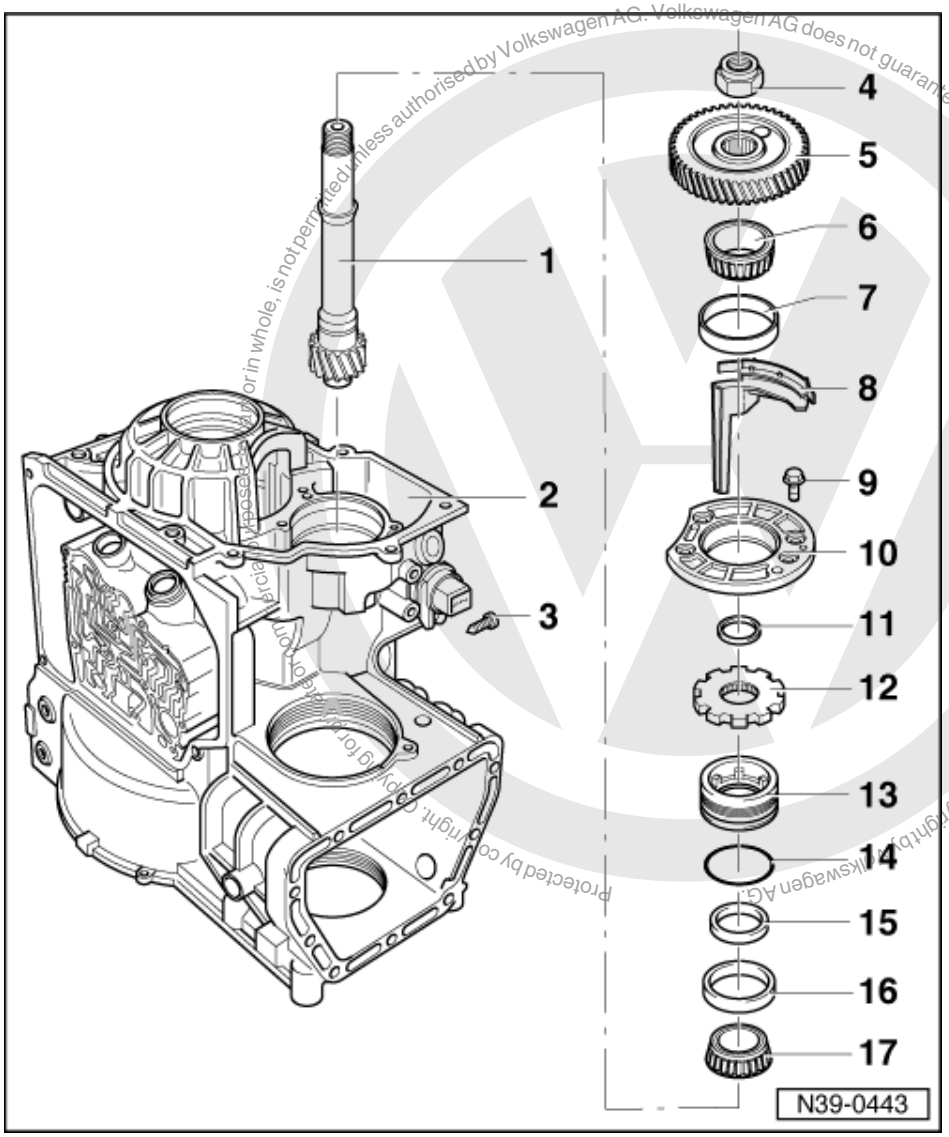

Volkswagen AG. Volkswagen AG does not guarantee or accept any liability with respect to the correctness of information in this document. Copyright by Volkswagen AG. Protected by copyright. Copying for private or commercial purposes, in part or in whole, is not permitted unless authorised by Volkswagen AG.

13 Bearing supporting ring, 200 Nm

- Remove screw -item 3 - before removing or installing bearing supporting ring.
- Removing or installing => Fig. 6
- Bearing supporting ring cannot be unscrewed until the selector shaft has been removed =>Page 203 , Dismantling and assembling parking lock
- Insert bearing supporting ring carefully. Sealing lip and spring must not be damaged.
- Supporting ring with seal => Fig. 7

14 O-ring

- Always replace
- Place onto bearing supporting ring -item 13 -

satelettronica

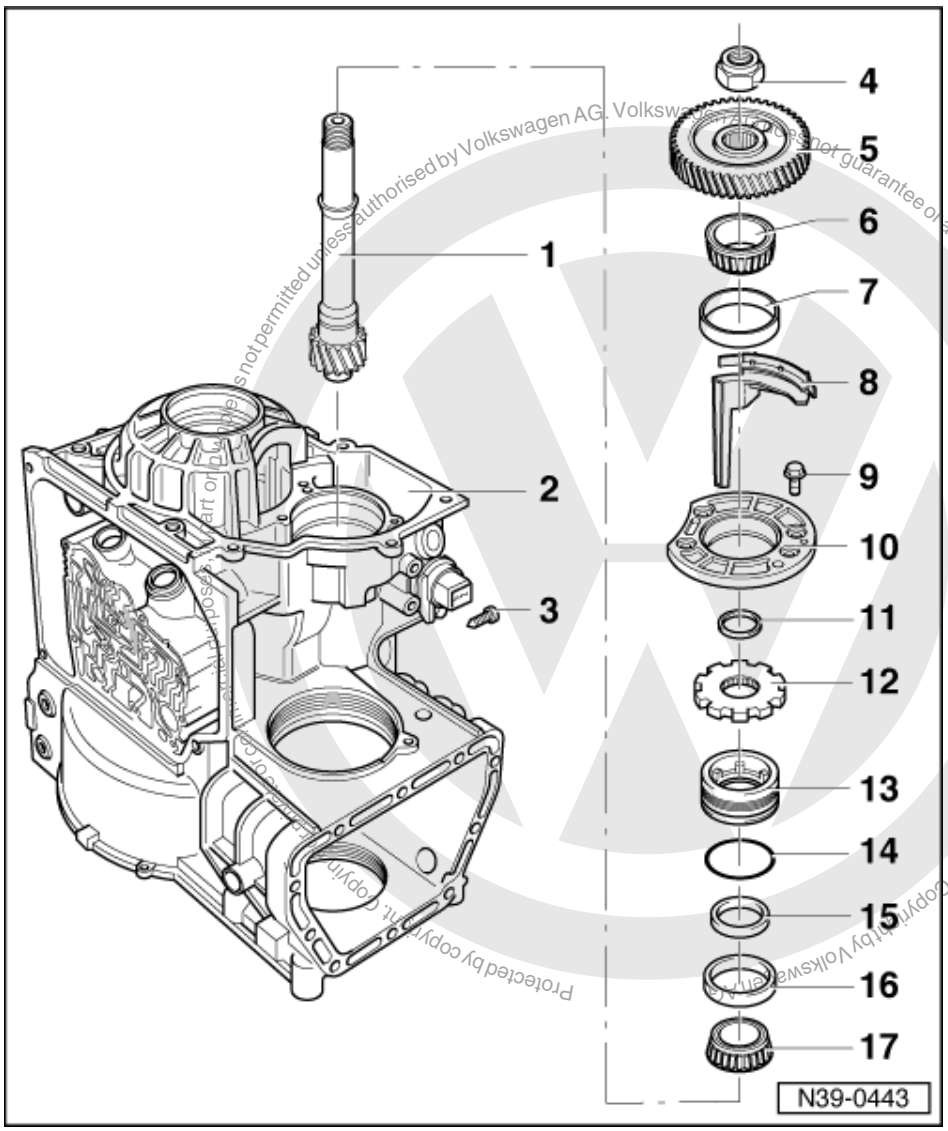

Protected by copyright. Copying for private or commercial purposes, in part or in whole, is not permitted unless authorised by Volkswagen AG. Volkswagen AG does not guarantee or accept any liability with respect to the correctness of information in this document. Copyright by Volkswagen AG.

15 Oil seal for drive pinion

- Remove with screwdriver
- Installation position =>Fig. 7
- Driving in => Fig. 8

16 Taper roller bearing outer race1)

- Driving in => Fig. 10

17 Taper roller bearing inner race1)

- Drive off with drift
- Pressing on => Fig. 11

satelettronica

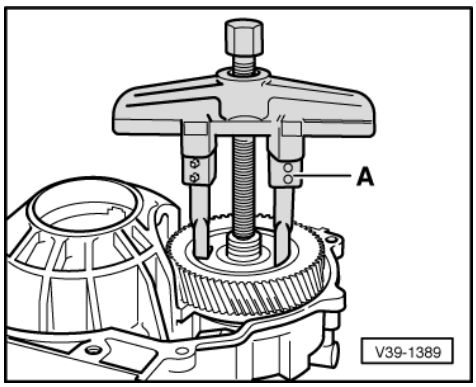

-> Fig.1 Pulling off output gear

A - Kukko 20-10 and Matra V 172 pulling hooks.

Output gears without holes in the hub can be pulled off by hand.

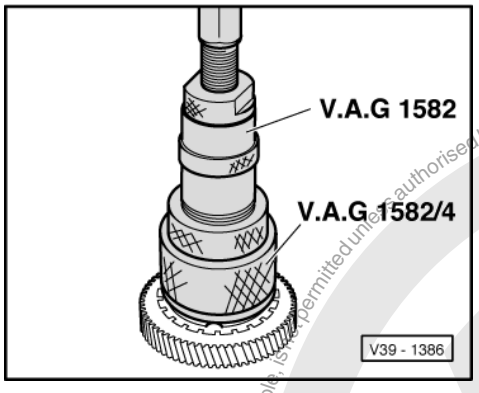

-> Fig.2 Pulling off taper roller bearing inner race

- Place press piece 3002 onto collar of output gear.

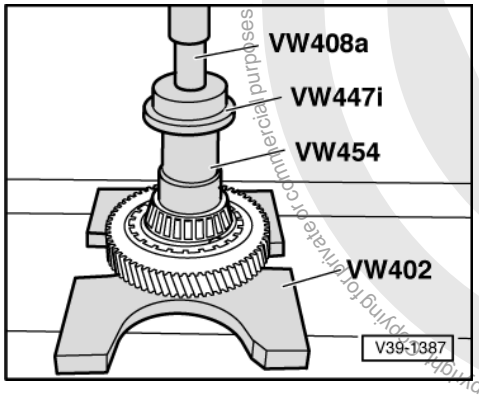

Protected by copyright. Copying for private or commercial purposes in part or in whole, is not permitted unless authorised by Volkswagen AG. Volkswagen AG does not guarantee or accept any liability with respect to the correctness of information in this document. Copyright by Volkswagen AG.
satelettronica

-> Fig.3 Pressing on taper roller bearing inner race

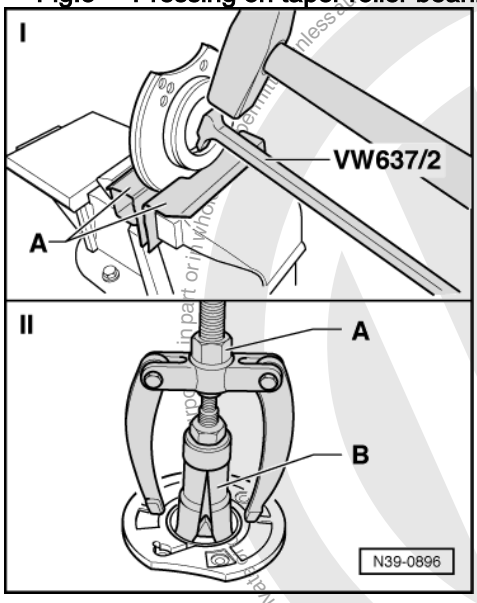

-> Fig.4 Removing taper roller bearing outer race

I - Clamp bearing cover in a vice using protective jaws -A-.

- Alternating sides, drive taper roller bearing outer race slightly away from bearing cover.

II -Then pull taper roller bearing outer race out of bearing cover.

A - Counter support, e.g. Kukko 22/2
B - Internal puller 46...58 mm, e.g. Kukko 21/7
- Check bearing cover for damage.

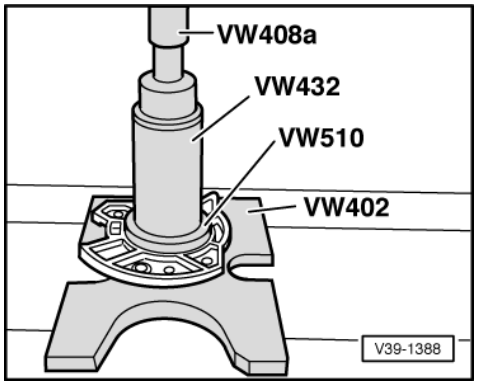

-> Fig.5 Pressing in taper roller bearing outer race

- Press taper roller bearing outer race in onto stop in bearing cap.

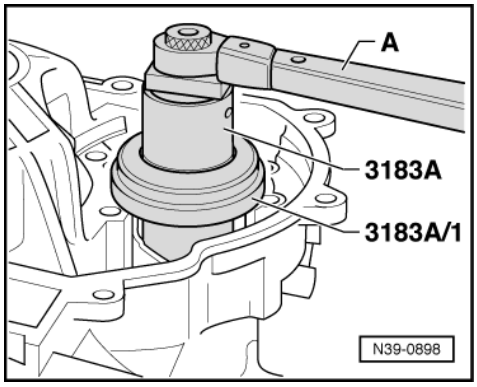

Volkswagen AG. Volkswagen AG does not guarantee or accept any liability with respect to the correctness of information in this document. Copyright by Volkswagen AG.
Protected by copyright. Copying in part or in whole is prohibited unless authorised by Volkswagen AG.
satelettronica

-> Fig.6 Removing and installing bearing supporting ring

Remove locking bolt.

A - Torque wrench

- Tighten bearing supporting ring to 200 Nm and secure with locking screw. Insert screw with AKD 456 000 01.

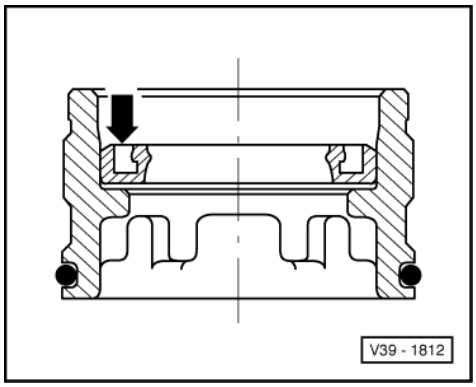

-> Fig.7 Bearing supporting ring with seal for drive pinion

Installation position of seal:

Open side (arrow) faces towards taper roller bearing outer race

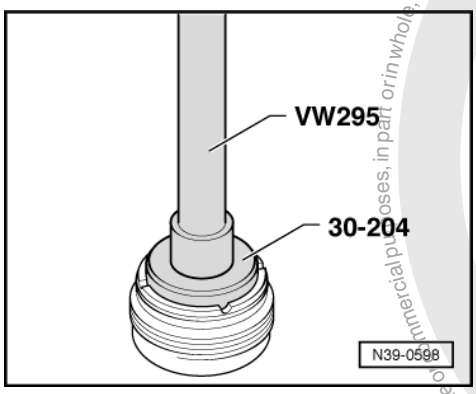

-> Fig.8 Driving in drive pinion oil seal

- Insert oil seal so that sealing lip faces outwards to special tool 30-204.
- Insert oil seal carefully. Sealing lip and spring must not be damaged.
- Drive oil seal in onto stop.

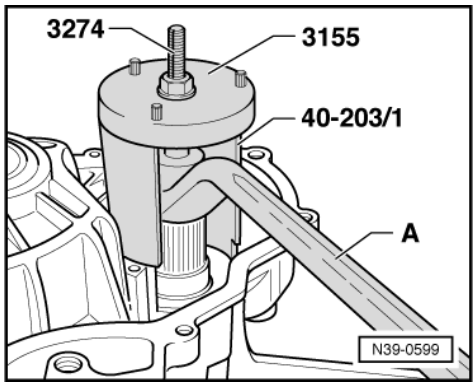

Protected by copyright. Copying for private or commercial purposes, in part or in whole, is not permitted unless authorised by Volkswagen AG. Volkswagen AG does not guarantee or accept any liability with respect to the correctness of information in this document. Copyright by Volkswagen AG.
satelettronica

-> Fig.9 Removing drive pinion

A - Ring spanner 32 mm

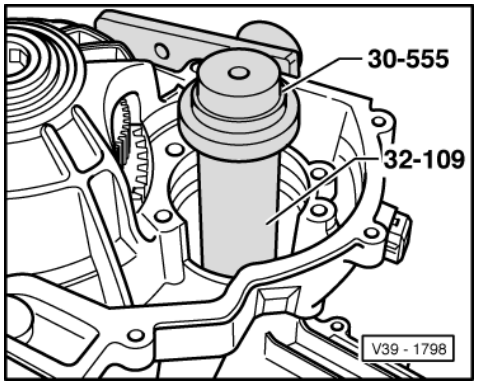

-> Fig.10 Driving in taper roller bearing outer race

- Insert drive pinion with taper roller bearing inner race, then drive in outer race.

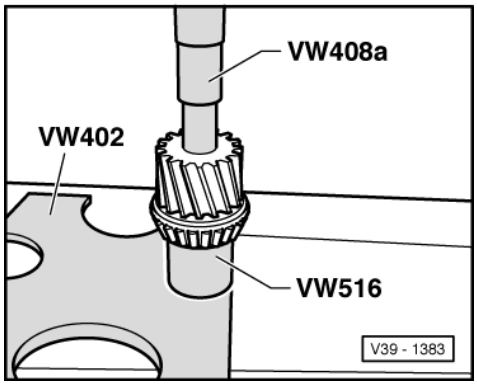

Protected by copyright. Copying for private or commercial purposes, in part or in whole, is not permitted unless authorised by Volkswagen AG. Volkswagen AG does not guarantee or accept any liability with respect to the correctness of information in this document. Copyright by Volkswagen AG.
satelettronica

-> Fig.11 Pressing on taper roller bearing inner race

3.5 - Removing and installing differential

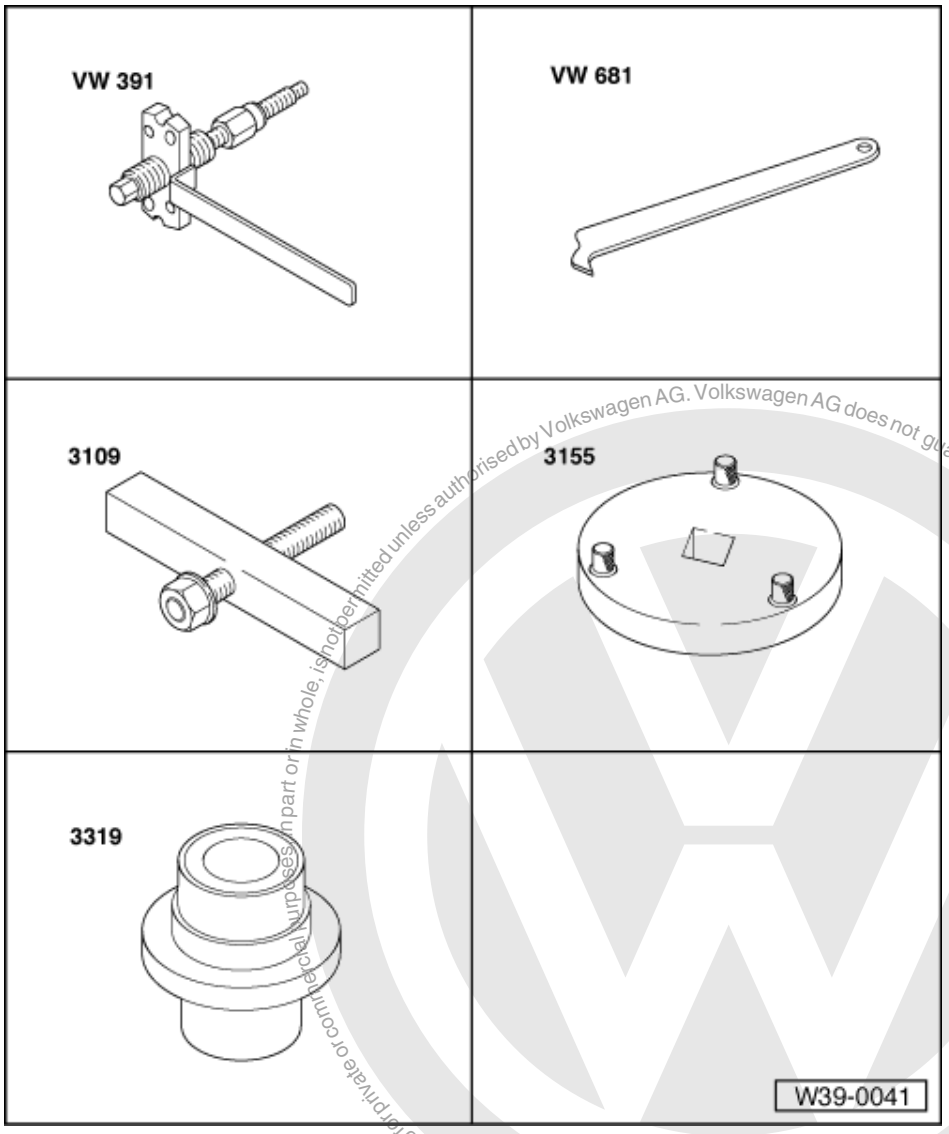

Protected by copyright. Copying for private or commercial purposes, in part or in whole, is not permitted unless authorised by Volkswagen AG. Volkswagen AG does not guarantee or accept any liability with respect to the correctness of information in this document. Copyright by Volkswagen AG.

satelettronica

Special tools, workshop equipment, test and measuring appliances and auxiliary items required

- VW 391 Drive shaft fitting appliance
- VW 681 Oil seal extractor
- 3109 Puller
- 3155 Ring nut spanner
- 3319 Thrust piece
- 2 - Kukko 18/0 Puller

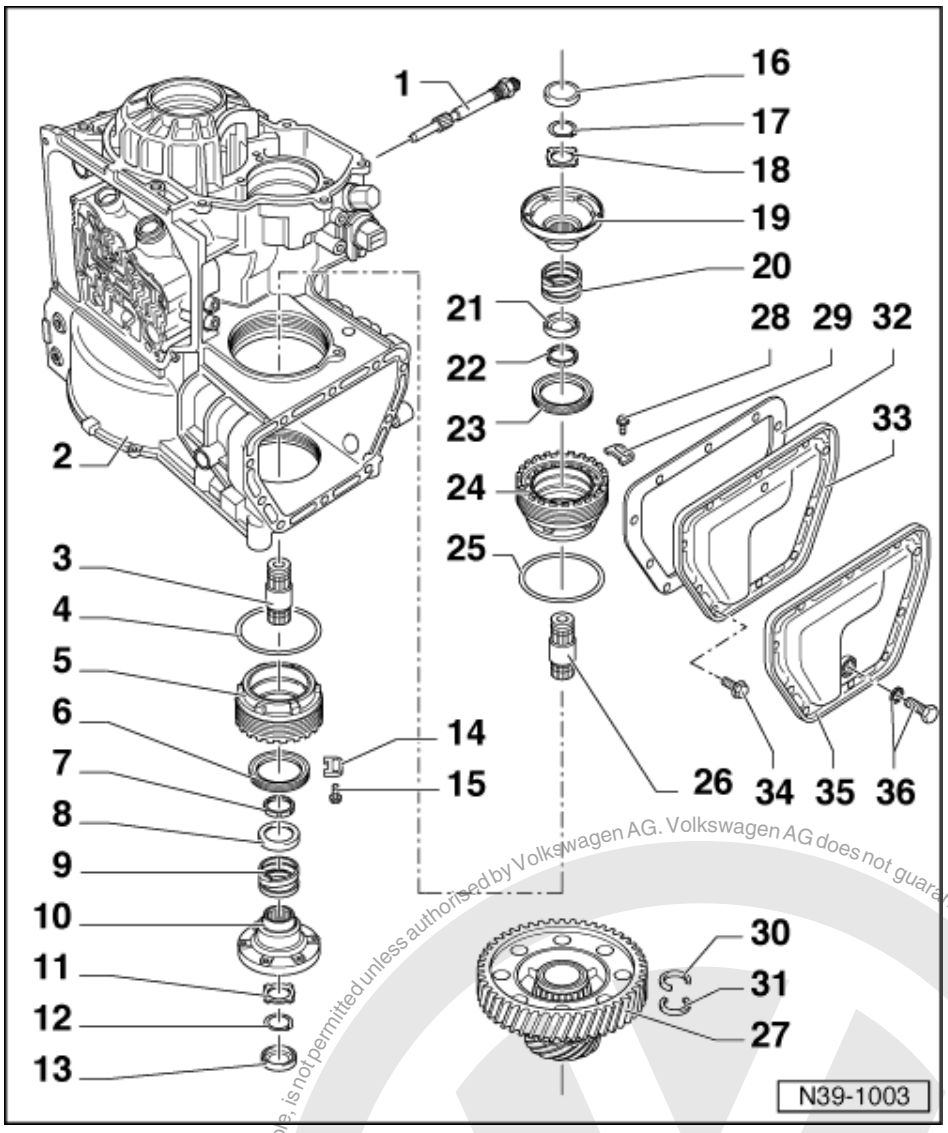

- Observe general repair instructions=> page 13 .

- If taper roller bearing is to be used again, adjusting ring must be marked => fig. 2 .
- To remove and install differential, drive pinion does not need to be removed.

1) When replacing these parts, adjustment work is necessary => Adjustment overview on page 268 .

1 Speedometer drive shaft

- With marking for oil level indication => Fig. 4

2 Gearbox housing

Protected by copyright. Copying for private or commercial purposes, in part or in whole, is not permitted unless authorised by Volkswagen AG. Volkswagen AG does not guarantee or accept any liability with respect to the correctness of information in this document. Copyright by Volkswagen AG.

satelettronica

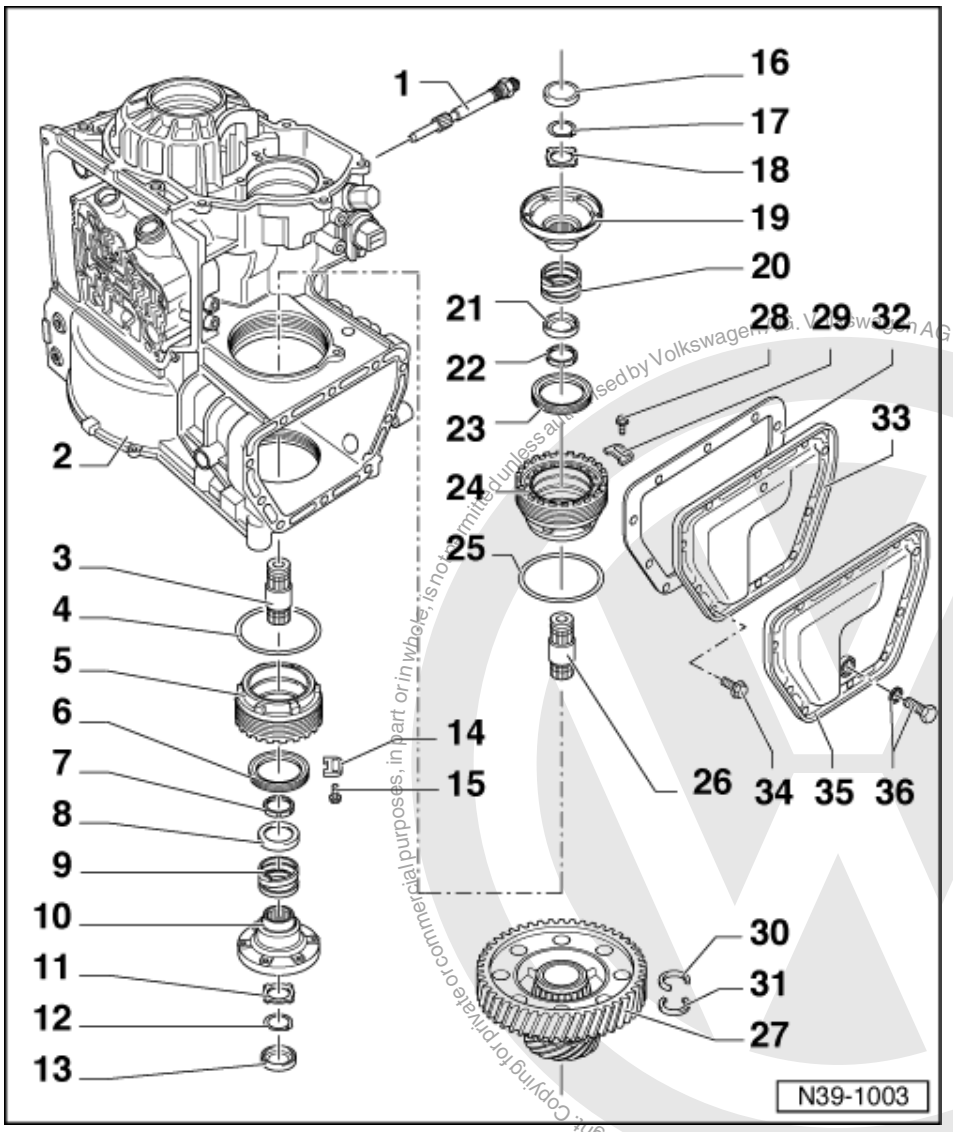

3 Output shaft for drive flange
- Install thread facing drive flange
- Remove before taking out differential
- First adjust differential before installing

4 O-ring
- Always replace

5 Adjusting ring
- If used bearings are re-inserted, mark installation position and position on marking again when installing => Fig. 2
- Removing => Fig. 3
- When installing new bearing, pay attention to setting instructions =>Adjusting differential, Page 273

Protected by copyright. Copyright for private or commercial purposes, in part or in whole, is not permitted unless authorised by Volkswagen AG. Volkswagen AG does not guarantee or accept any liability with respect to the correctness of information in this document. Copyright by Volkswagen AG.
satelettronica

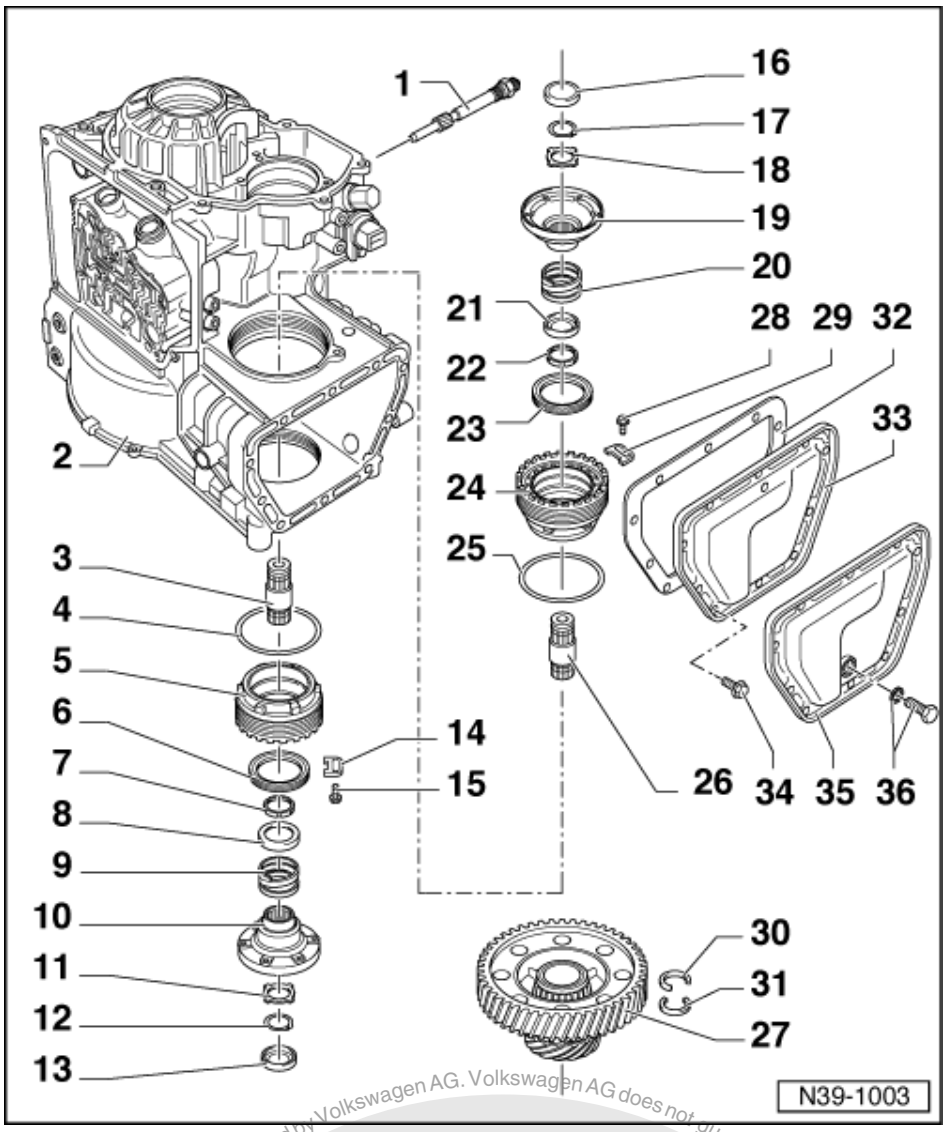

6 Oil seal for flange/shaft
- Before installing, pack space between sealing lips half-full with sealing grease G 052 128 A1
- Can be renewed with gearbox installed =>Page 216
- Remove with VW 681
- Driving in => Fig. 1

7 Taper ring
- Shoulder faces thrust washer

8 Thrust washer
- Place over compression spring

9 Compression spring

10 Drive flange
- Insert with taper ring, thrust washer and compression spring
- Remove before taking out inner circlip on bevel gear
- Removing and installing => from 216

satelettronica

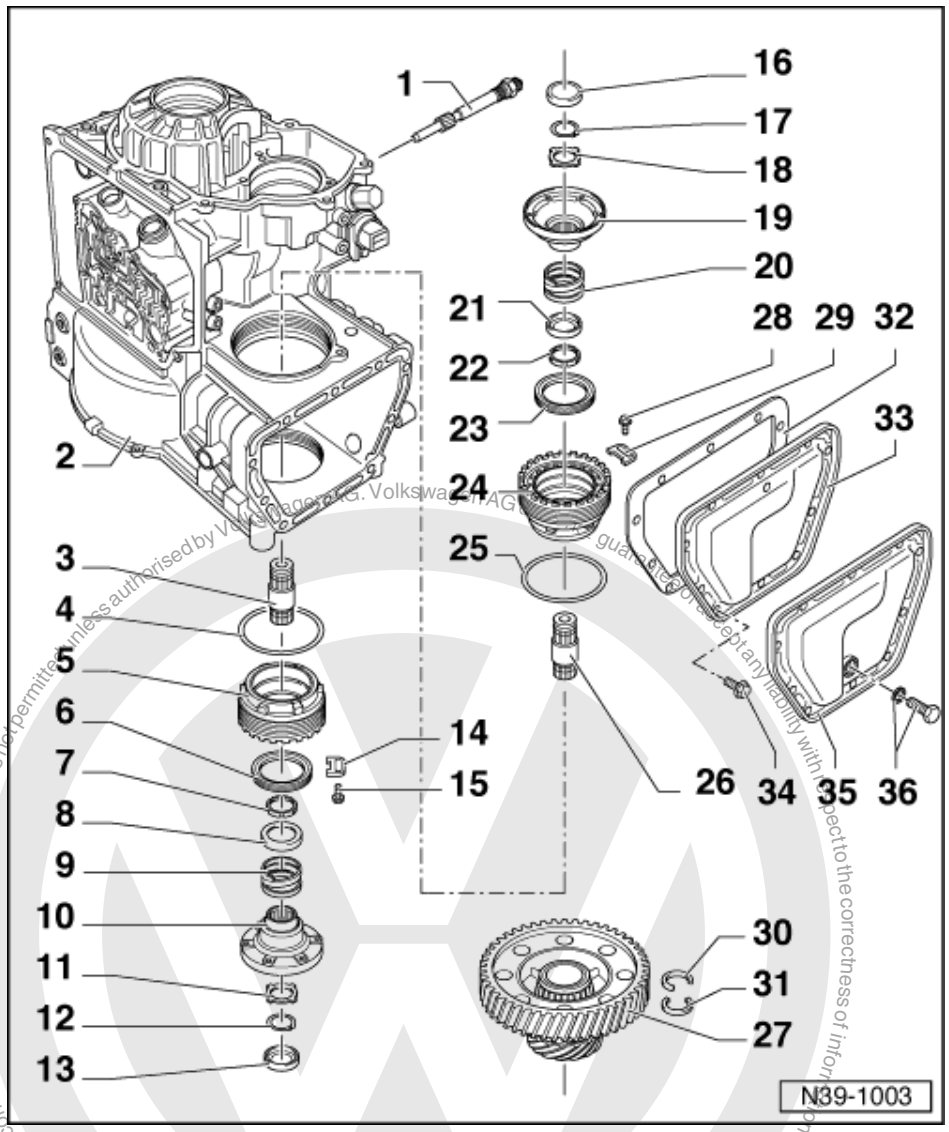

11 Dished washer
12 Circlip
13 Cover
14 Locking element
15 Screw, 12 Nm
16 Cover
17 Circlip
18 Dished washer
19 Drive flange

- Insert with taper ring, thrust washer and compression spring
- Remove before taking out inner circlip on bevel gear
- Removing and installing => from 216

Protected by copyright. Copyright by Volkswagen AG.
For commercial purposes, in part or in whole, is not permitted unless authorised by Volkswagen AG. Volkswagen AG does not guarantee or accept any liability with respect to the correctness of information in this document.
satelettronica

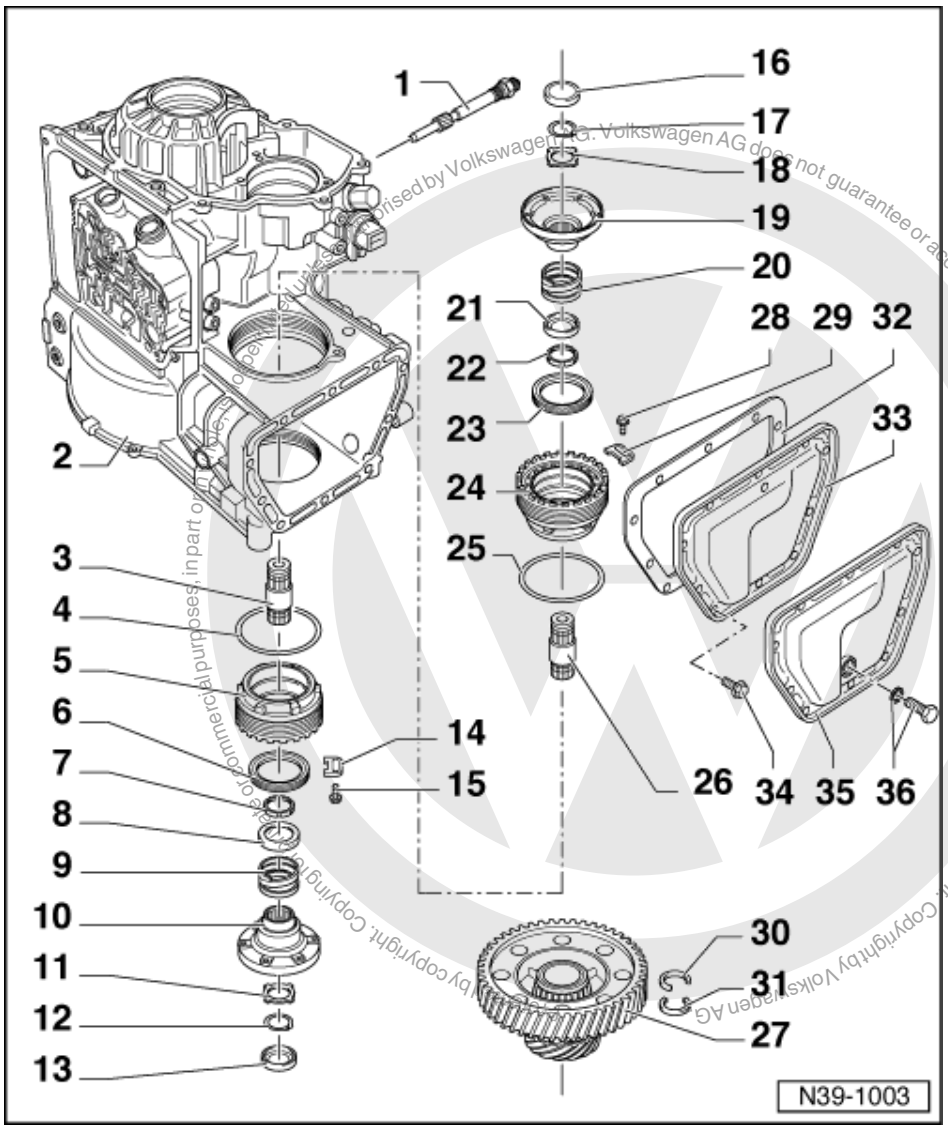

20 Compression spring

21 Thrust washer

- Place over compression spring

22 Taper ring

- Shoulder faces thrust washer

23 Oil seal for flange/shaft

- Before installing, pack space between sealing lips half-full with sealing grease G 052 128 A1
- Can be renewed with gearbox installed =>Page 216
- Remove with VW 681
- Driving in => Fig. 1

24 Bearing body, 150 Nm

- Remove with 3155
- Installing => Fig. 5

25 O-ring

- Always replace

satelettronica

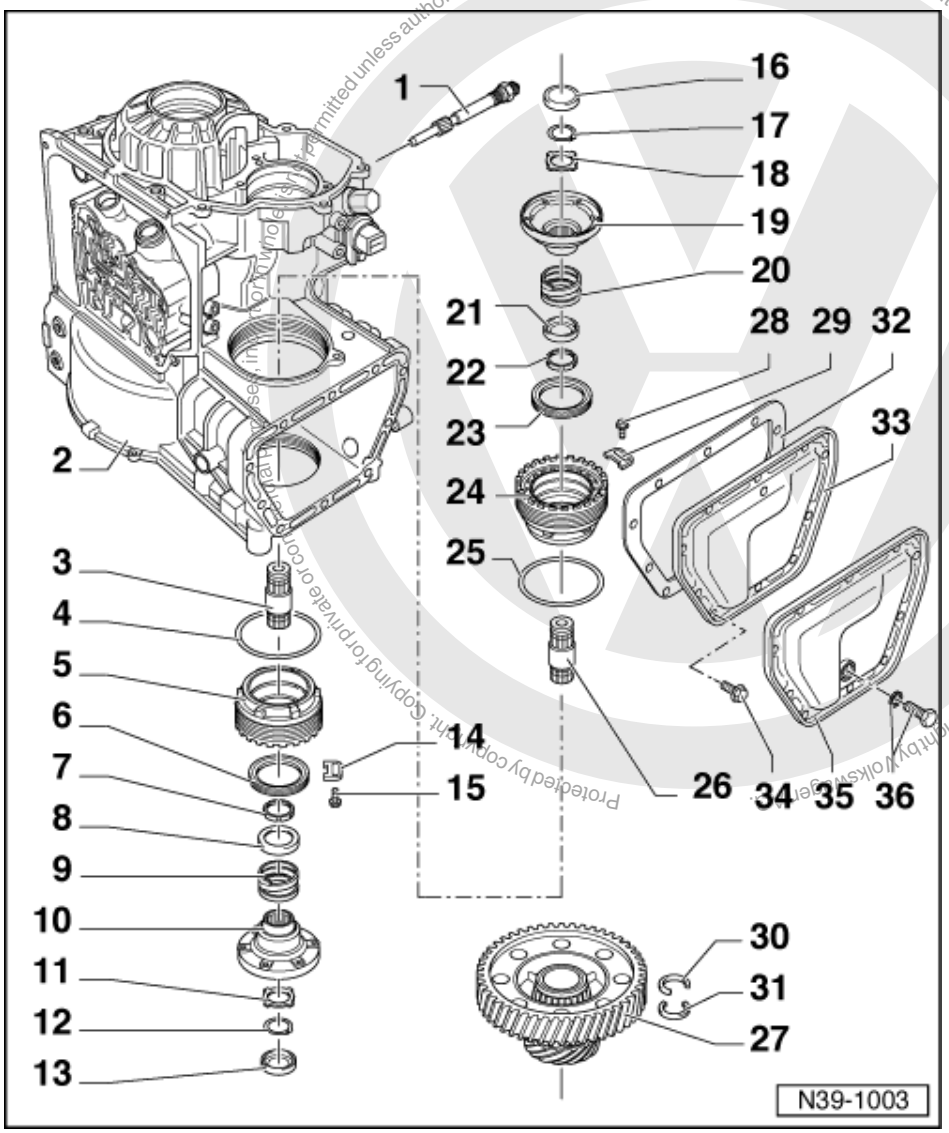

26 Output shaft for drive flange

- Install thread facing drive flange
- Before removing, take out differential
- First adjust differential before installing

27 Differential1)

- Dismantling and assembling =>Page 254
- Before removing differential, take out bearing body, adjusting ring and output shafts

28 Screw, 12 Nm

29 Locking element

After adjusting taper roller bearing, secure bearing body - 24 - and adjusting ring - 5 -.

satelettronica

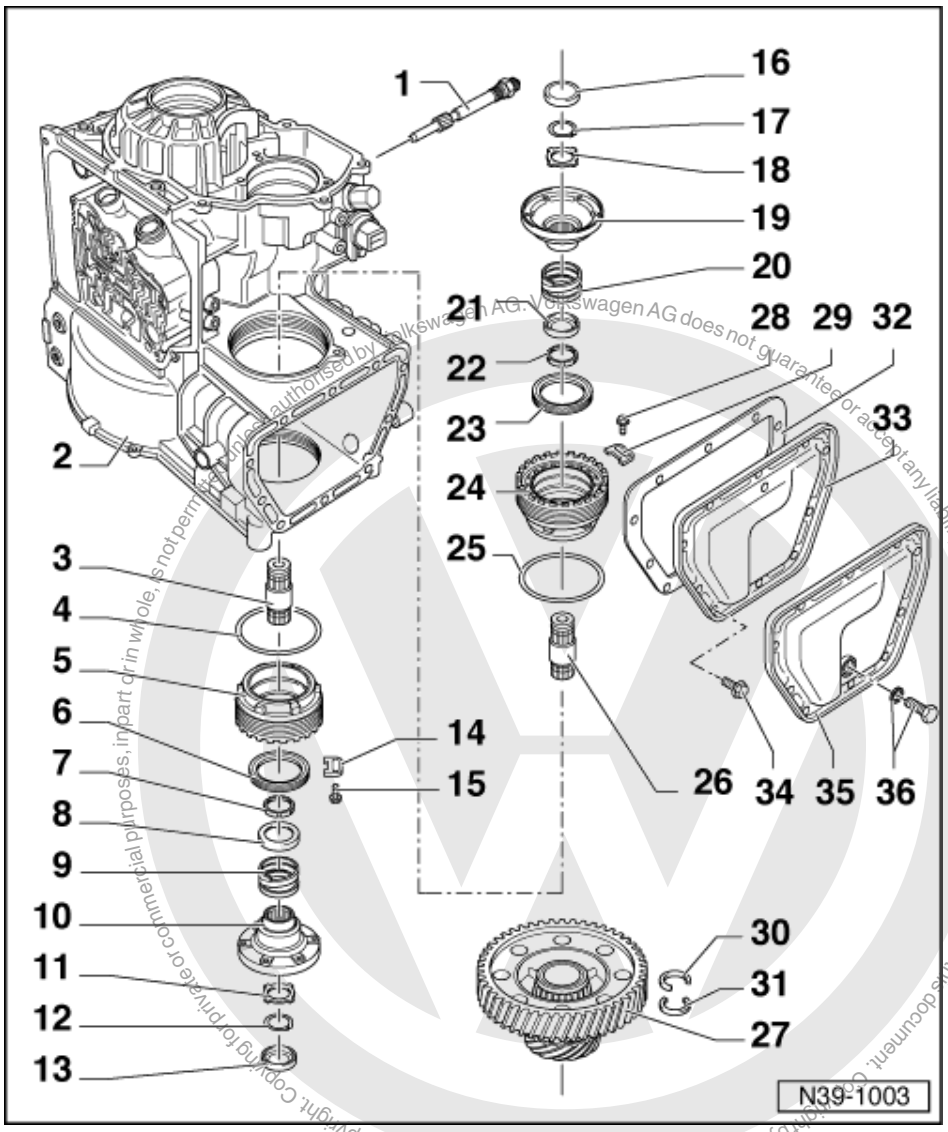

30 Circlip
- First remove drive flange before removing circlip
- Removing and installing => Fig. 6

31 Circlip
- First remove drive flange before removing circlip
- Removing and installing => Fig. 6

32 Seal
- Always replace

33 Cover
- For differential
- - 35 - is supplied as spare part

34 Screw, 28 Nm
- Insert with locking fluid
  AMV 185 101 A1

satelettronica

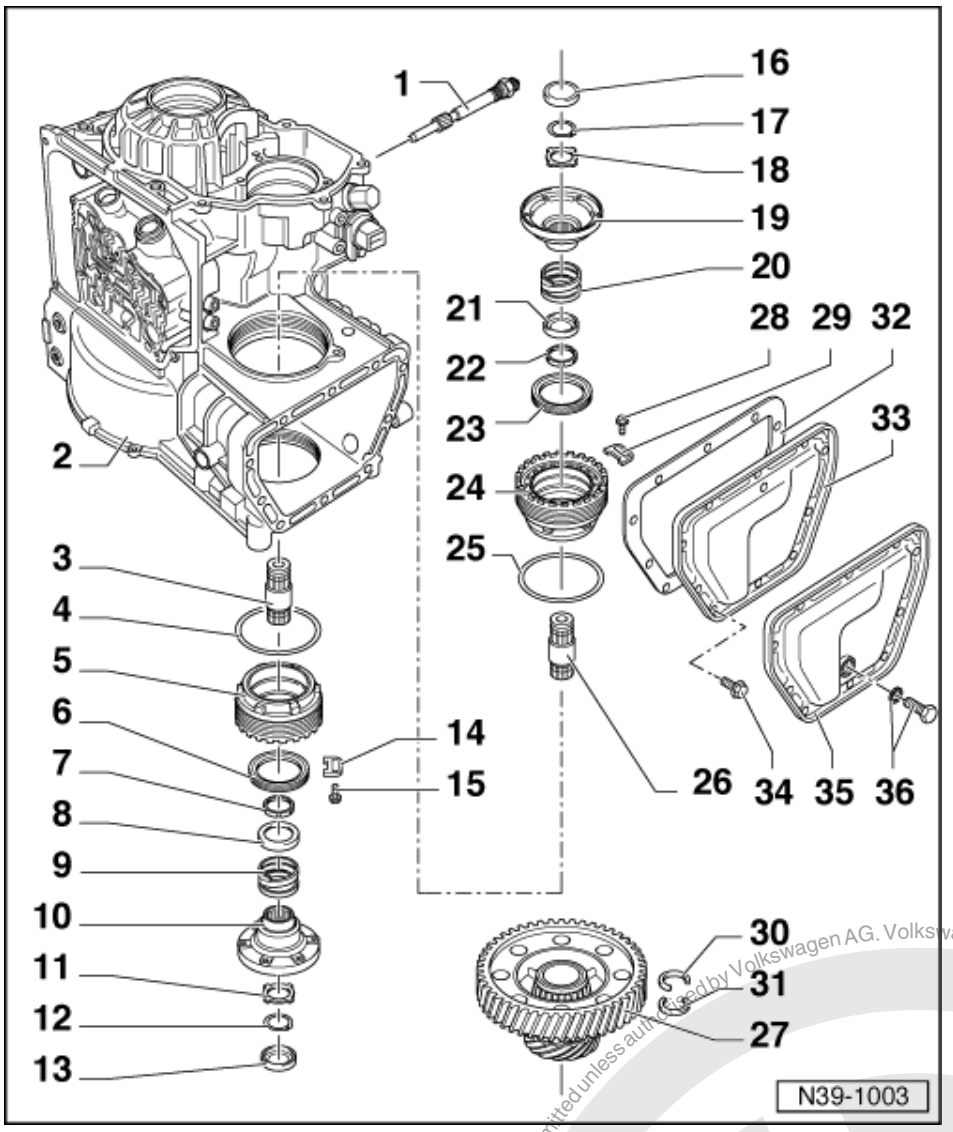

35 Cover

- For differential
- With sealing plug for checking gear oil level in final drive

36 Sealing plug, 25 Nm

- With seal
- Always replace

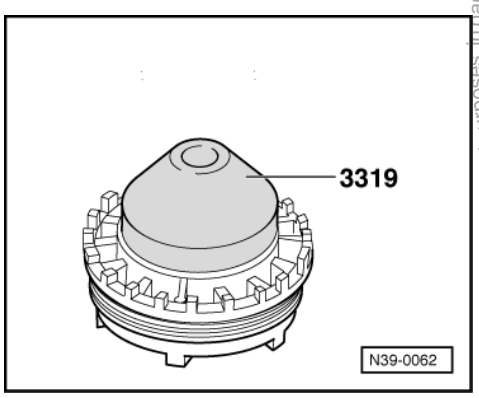

satelettronica
Protected by copyright. Copying for private or commercial purposes, in part or in whole, is not permitted unless authorised by Volkswagen AG. Volkswagen AG does not guarantee or accept any liability with respect to the correctness of information in this document. Copyright by Volkswagen AG.

-> Fig.1 Driving in flange/shaft oil seal to stop

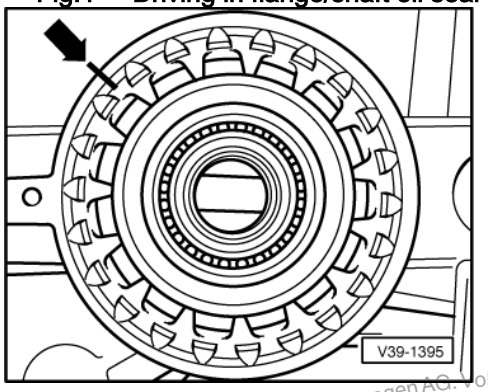

-> Fig.2 Marking adjusting ring

- If used bearings are re-inserted, mark installation position (arrow) and again position on marking when installing.

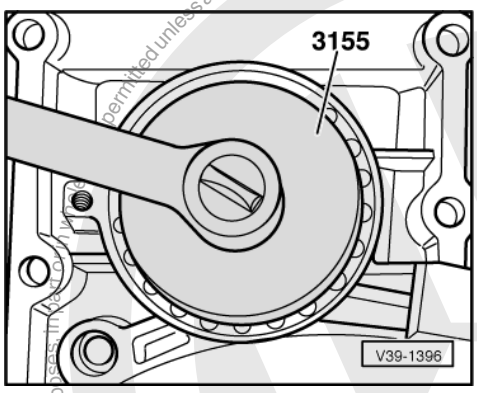

-> Fig.3 Removing adjusting ring

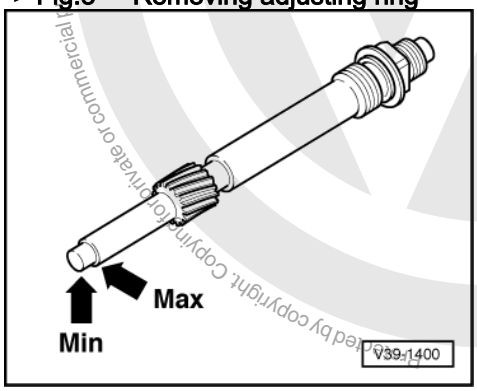

-> Fig.4 Speedometer drive

- With gearbox installed, check final drive oil level => page 214 .

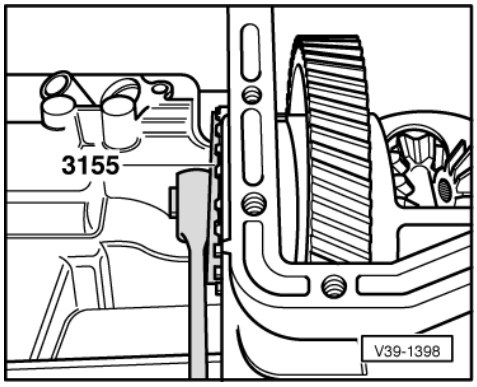

Protected by copyright. Copyright not private or commercial purposes in any form. Volkswagen AG. Volkswagen AG does not guarantee or accept any liability with respect to the correctness of information in this document. Copyright by Volkswagen AG.
satelettronica

-> Fig.5 Inserting differential and screwing in bearing body as far as stop to 150 Nm

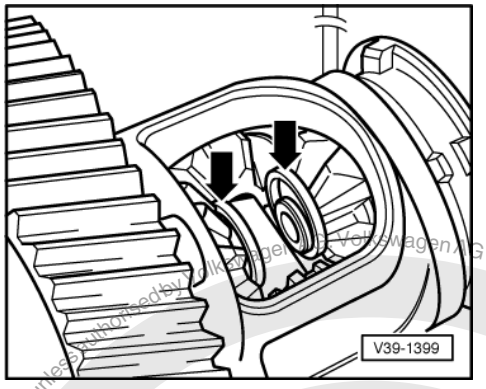

-> Fig.6 Inserting circlip (arrow)

- Remove circlip with two screwdrivers.

3.6 - Dismantling and assembling differential

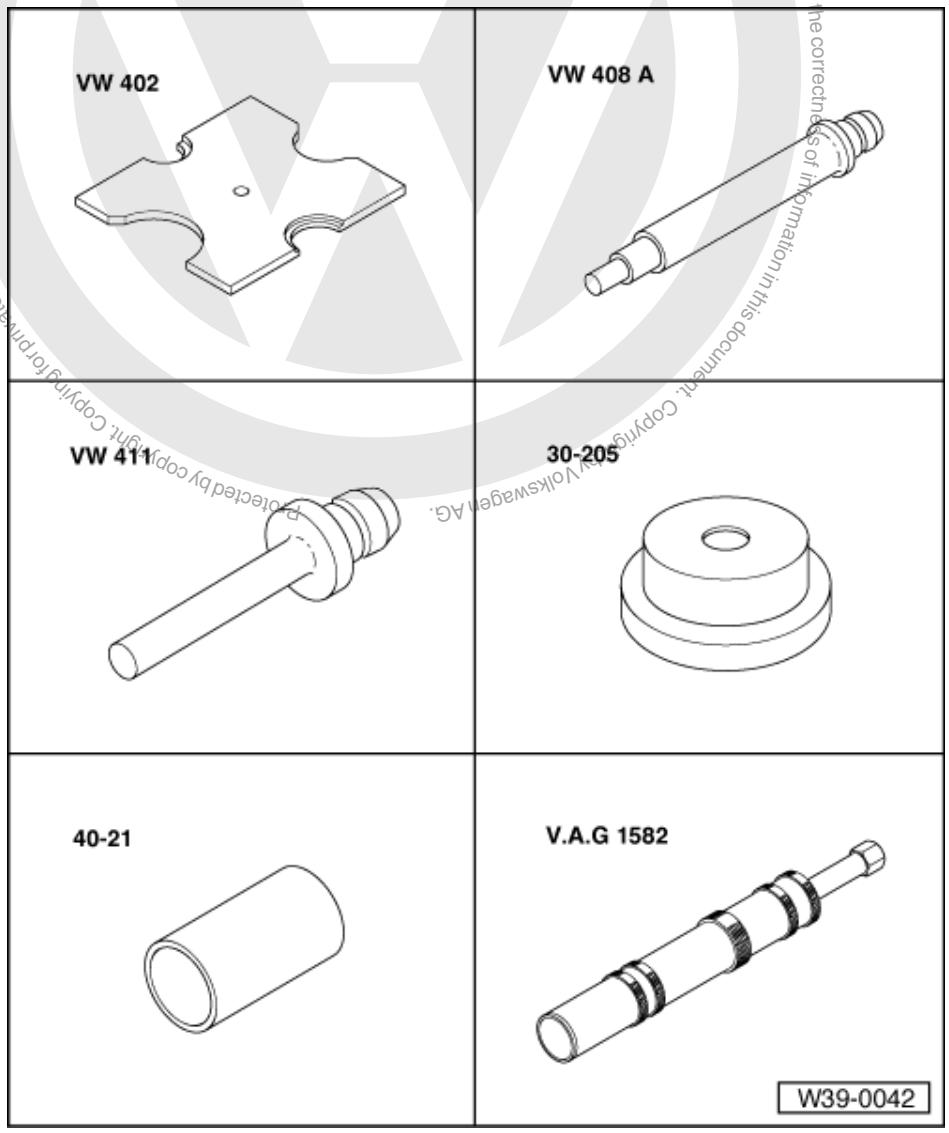

satelettronica

Special tools, workshop equipment, test and measuring appliances and auxiliary items required

- VW 402 Thrust plate
- VW 408 A Press tool
- VW 411 Press tool
- 30-205 Thrust plate
- 40-21 Press tool
- V.A.G 1582 Taper roller bearing puller

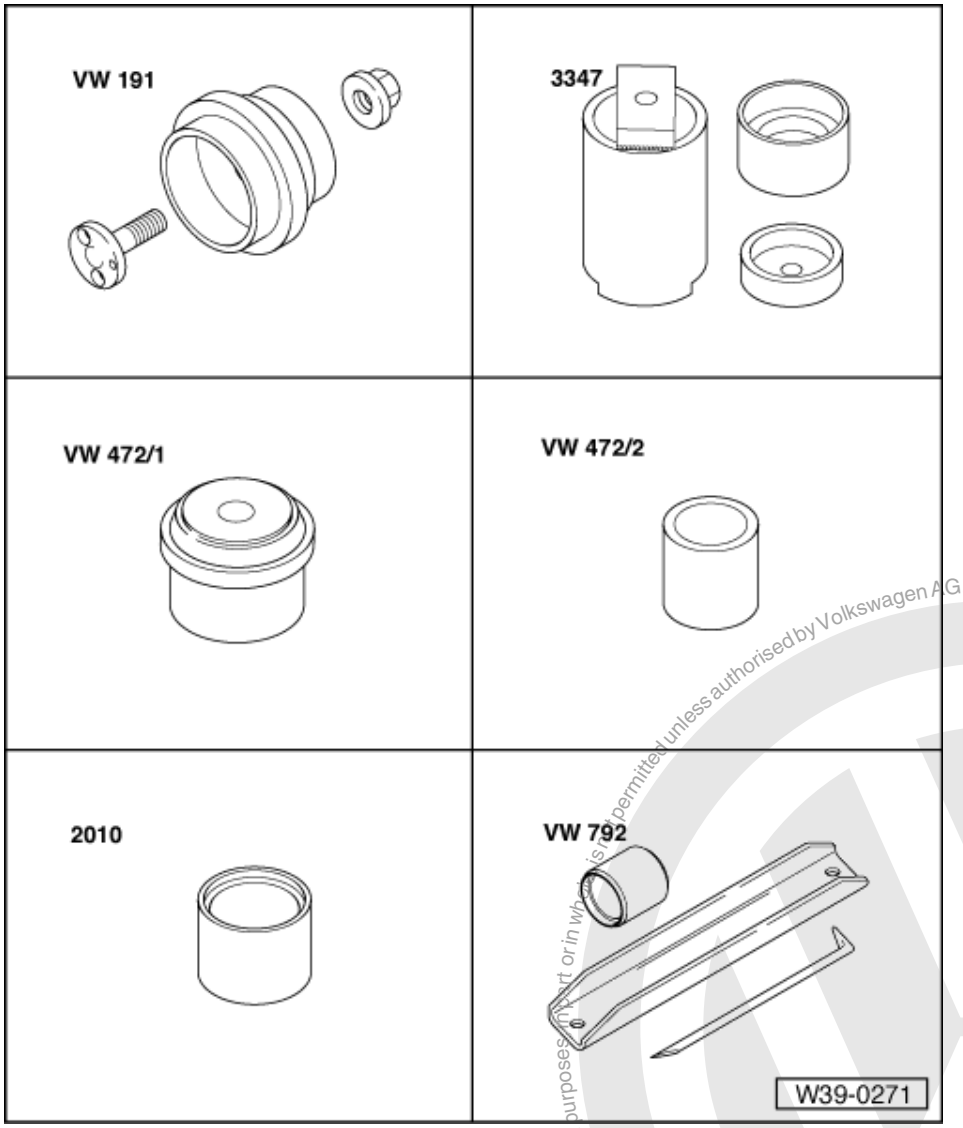

Special tools, workshop equipment, test and measuring appliances and auxiliary items required

- VW 191
- VW 472/1 Thrust piece
- VW 472/2 Thrust piece
- VW 792 Thrust piece
- 3347 Assembly tool
- 2010

satelettronica
Protected by copyright. Copying for private or commercial purposes, in part or in whole, is not permitted unless authorised by Volkswagen AG. Volkswagen AG does not guarantee or accept any liability with respect to the correctness of information in this document. Copyright by Volkswagen AG.

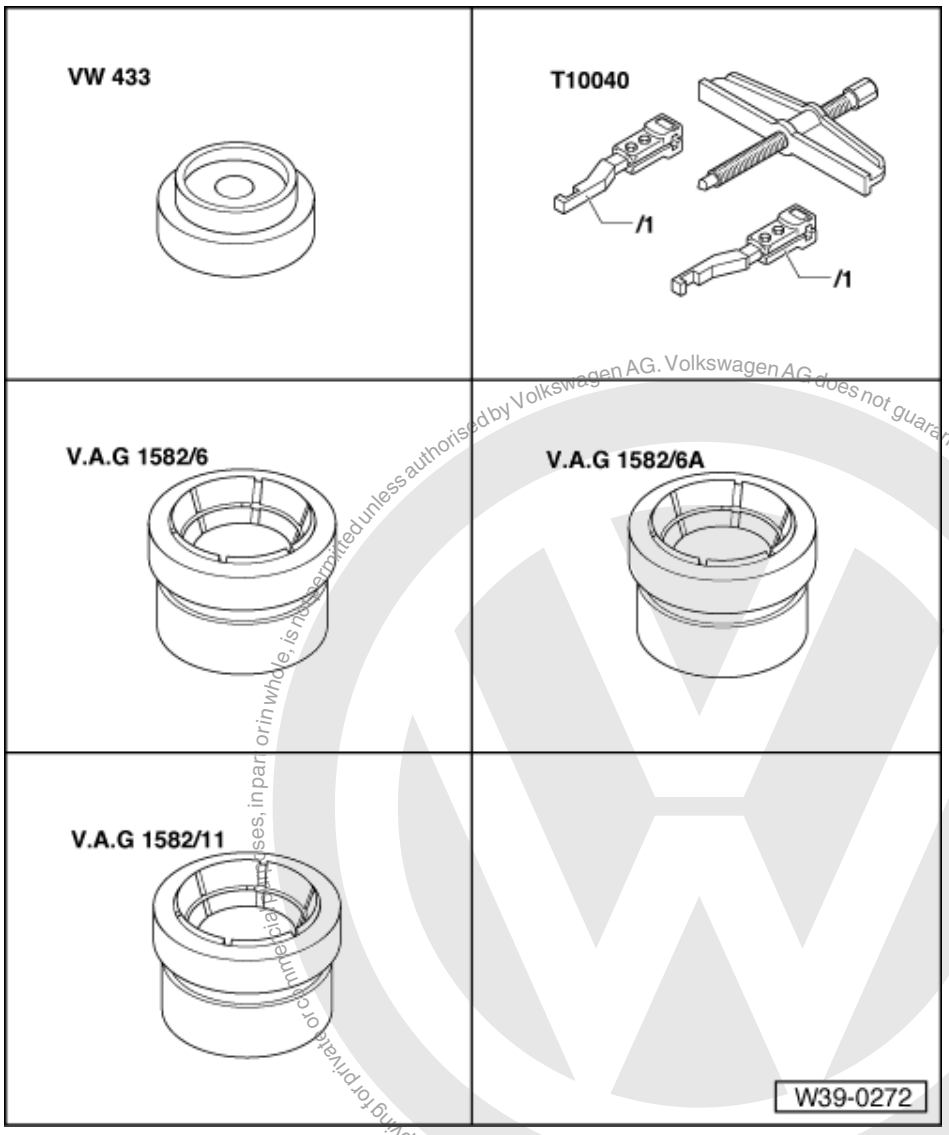

Special tools, workshop equipment, test and measuring appliances and auxiliary items required

- VW 433 Thrust piece
- V.A.G 1582/6 Grip
- V.A.G 1582/6A Grip
- V.A.G 1582/11 Grip
- Kukko 21/7 Internal puller
- Kukko 22/2 Counter-support

Special tools, workshop equipment, testers, measuring instruments and auxiliary items required

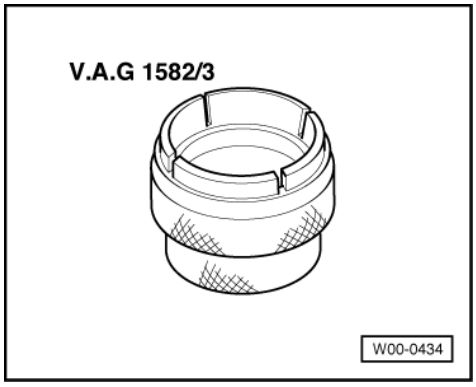

Protected by copyright. Copying for private or commercial purposes, in part or in whole, is not permitted unless authorised by Volkswagen AG. Volkswagen AG does not guarantee or accept any liability with respect to the correctness of information in this document. Copyright by Volkswagen AG.
satelettronica

- V.A.G 1582/3 Clamping ring

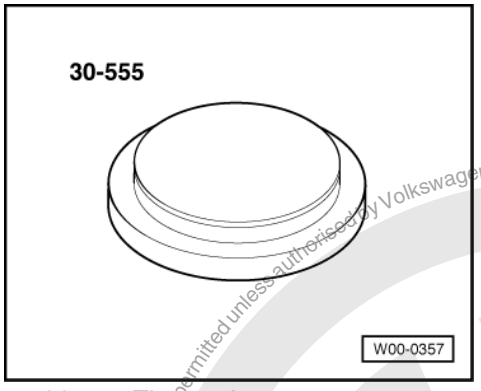

- 30-555 Thrust piece

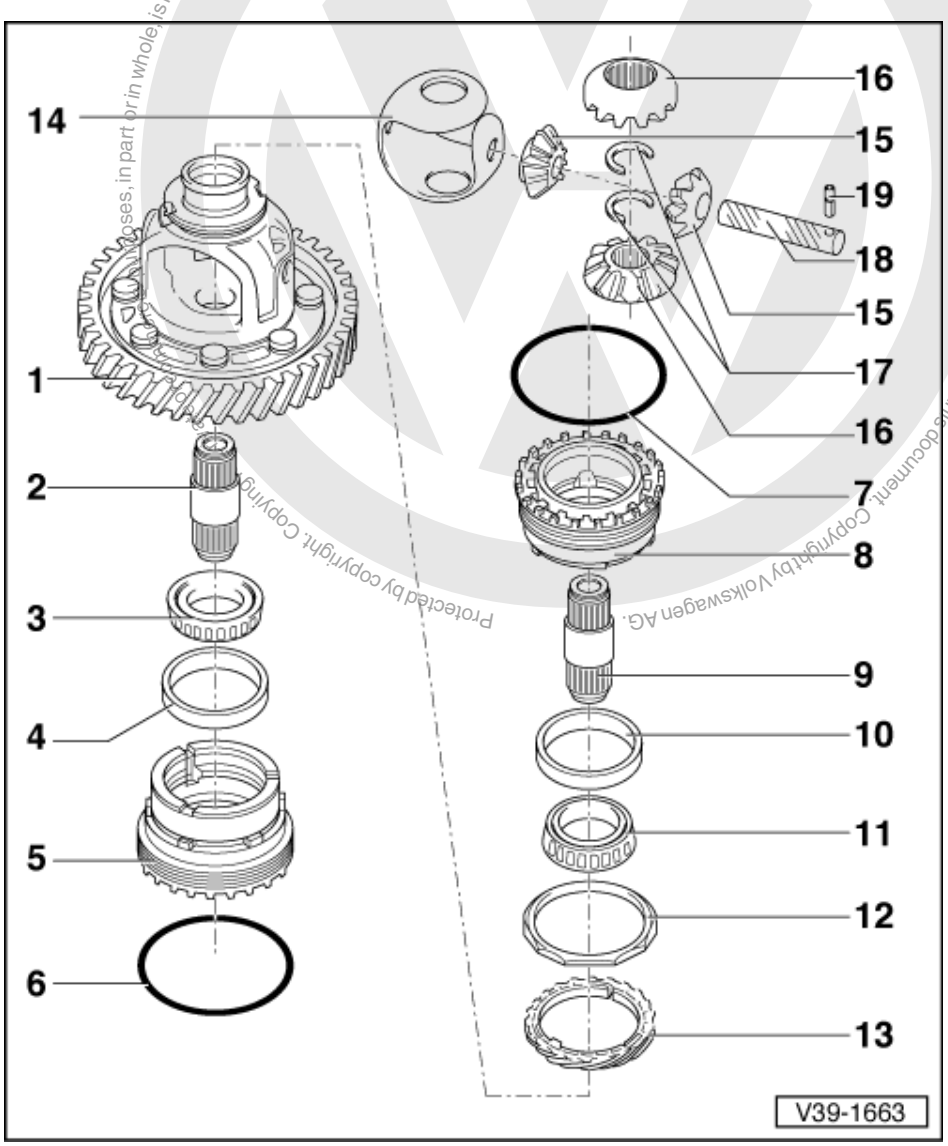

- Heat taper roller bearing inner race to 100°C before pressing on.
- Heat taper roller bearing adjusting ring to 100°C before pressing in taper roller bearing outer race.

1 Differential housing with riveted gear for final drive
- Final drive gear is riveted onto differential housing and then machined
- If the differential or final drive gear is damaged, replace the differential housing together with the riveted final drive gear
- Number of teeth on final drive gear =>from Page 3

Protected by copyright. Copying for private or commercial purposes, in part or in whole, is not permitted unless authorised by Volkswagen AG. Volkswagen AG does not guarantee or accept any liability with respect to the correctness of information in this document. Copyright by Volkswagen AG.

satelettronica

- The differential housings differ depending on the diameter of the taper roller bearings

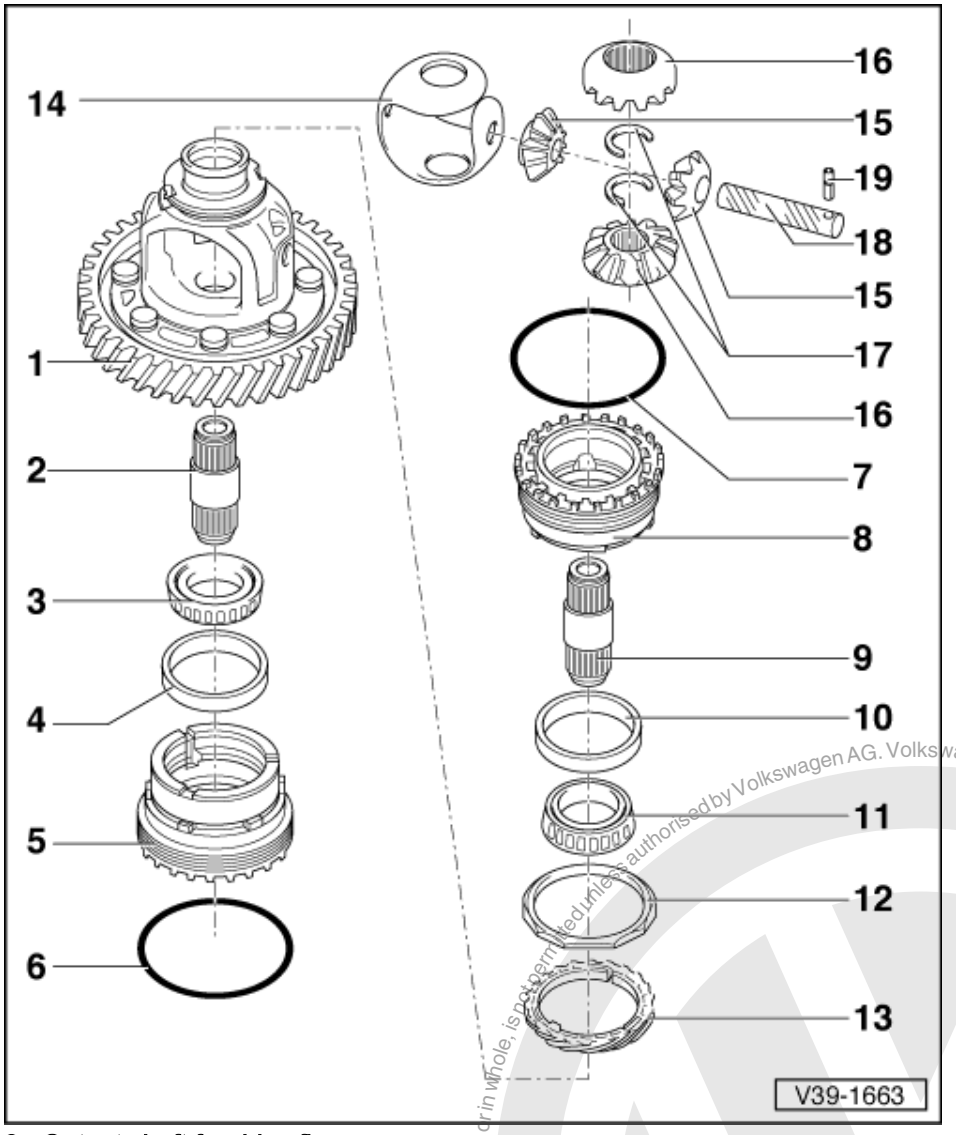

2 Output shaft for drive flange
- Removing and installing
  => Page 243

3 Taper roller bearing
- There are different sizes of taper roller bearings. The fitting location can vary
- Pulling off => Fig. 1 and Fig. 3
- Pressing on => Fig. 2 (with equal sized bearings on both sides)
- Pressing on => Fig. 4

4 Taper roller bearing outer race
- Remove and install only when adjusting ring heated
- Drive out with drift
- Pressing in => Fig. 6

Protected by copyright. Copying for private or commercial purposes, in part or in whole, is not permitted unless authorised by Volkswagen AG. Volkswagen AG does not guarantee or accept any liability with respect to the correctness of information in this document. Copyright by Volkswagen AG.
satelettronica

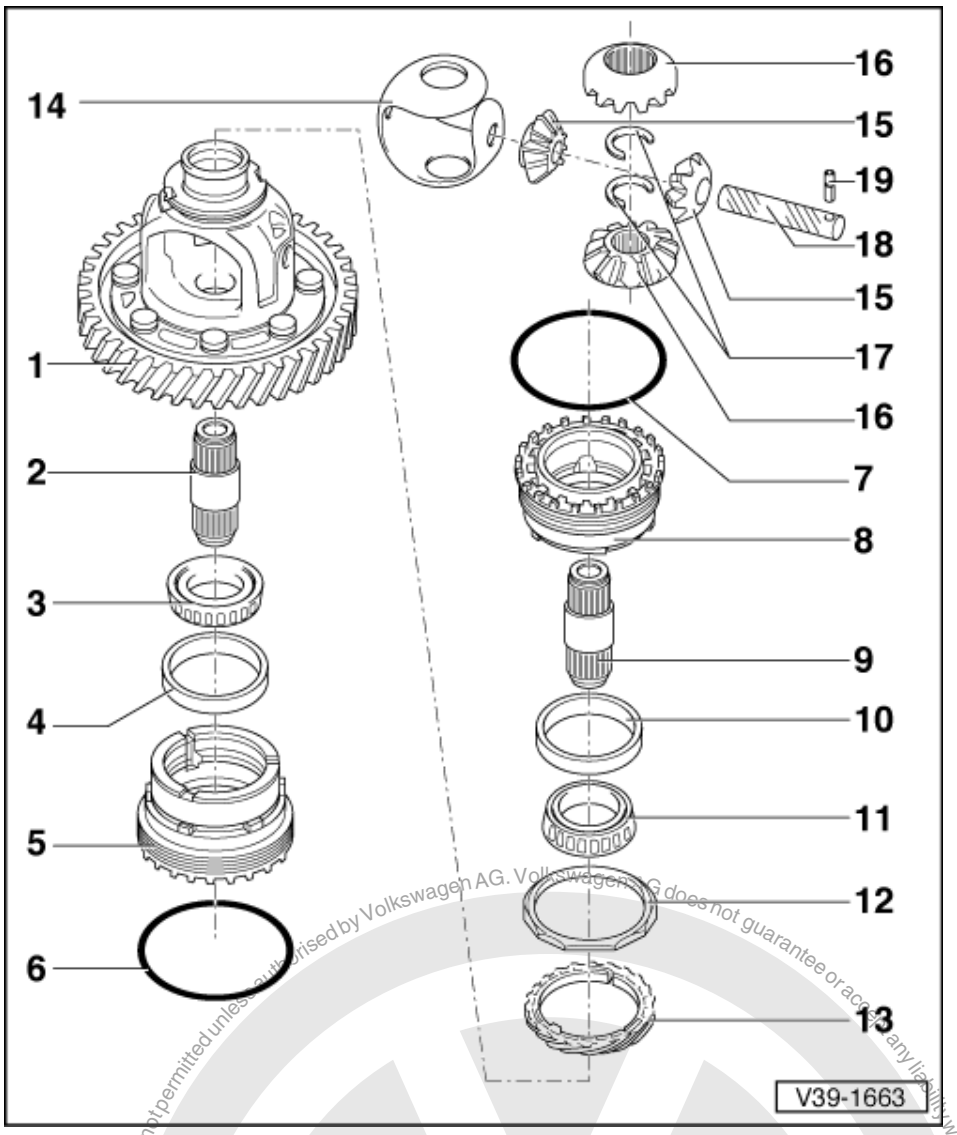

5 Bearing body for taper roller bearing
- There are different types of bearing body
- Removing and installing => Removing and installing differential, Page 243
- Pulling off taper roller bearing/inner race => as Fig. 9
- Pressing on => Fig. 8
- Pressing on => Fig. 10

6 O-ring
- Always replace

7 O-ring
- Always replace

8 Adjusting ring for taper roller bearing
- Removing and installing => Removing and installing differential, Page 243

satelettronica

Protected by copyright. Copying for private or commercial purposes, in part or in whole, is not permitted unless authorised by Volkswagen AG. Volkswagen AG does not guarantee or accept any liability with respect to the correctness of information in this document. Copyright by Volkswagen AG.

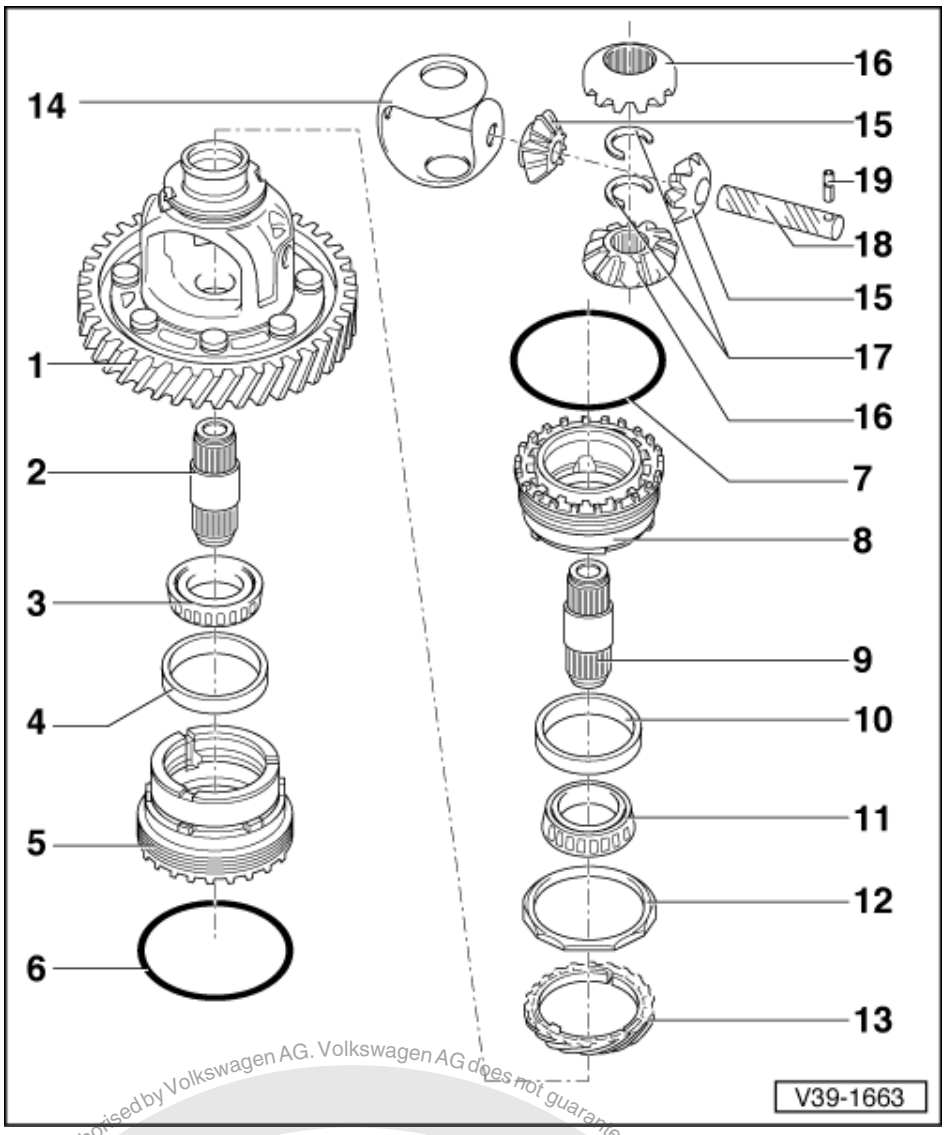

9 Output shaft for drive flange

- Removing and installing => Removing and installing differential, Page 243

10 Taper roller bearing outer race

- Remove and install only when adjusting ring heated
- Drive out with drift
- Pressing in => Fig. 6

11 Taper roller bearing inner race

- There are different sizes of taper roller bearings. The fitting location can vary
- Pulling off => as Fig. 1 (with equal sized bearings on both sides)
- Pressing on => Fig. 2

satelettronica
Protected by copyright. Copying for private or commercial purposes, in part or in whole, is not permitted unless authorised by Volkswagen AG. Volkswagen AG does not guarantee or accept any liability with respect to the correctness of information in this document. Copyright by Volkswagen AG.

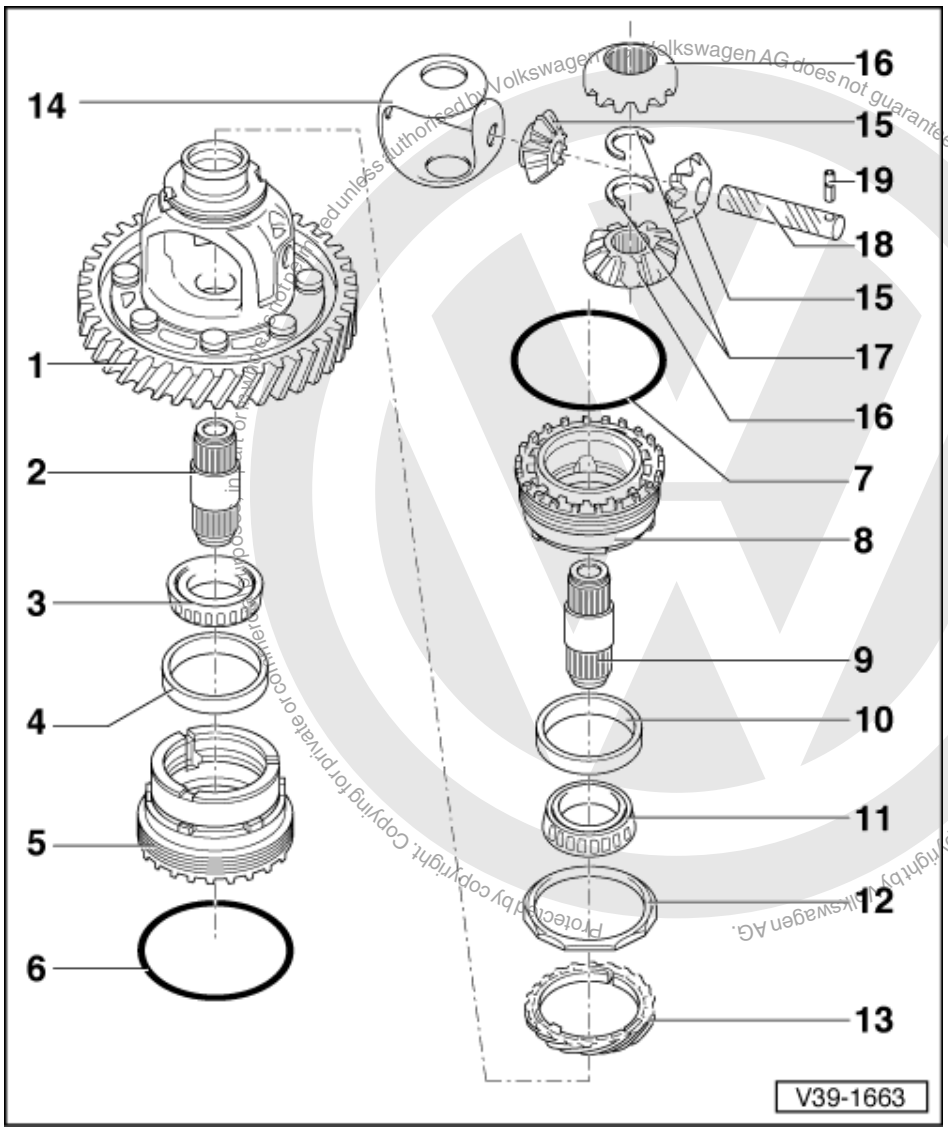

12 Driver bush
- Drive off together with speedometer drive gear -item 13 -
- Drive on with drift

13 Speedometer drive gear
- Drive out with a drift
- Fit on together with driver bush -item 12 -

14 One-piece thrust washer
- Place into differential cage before inserting bevel gears

15 Small bevel gears
- Inserting => Fig. 5

16 Large bevel gears
- Inserting => Fig. 5

satelettronica

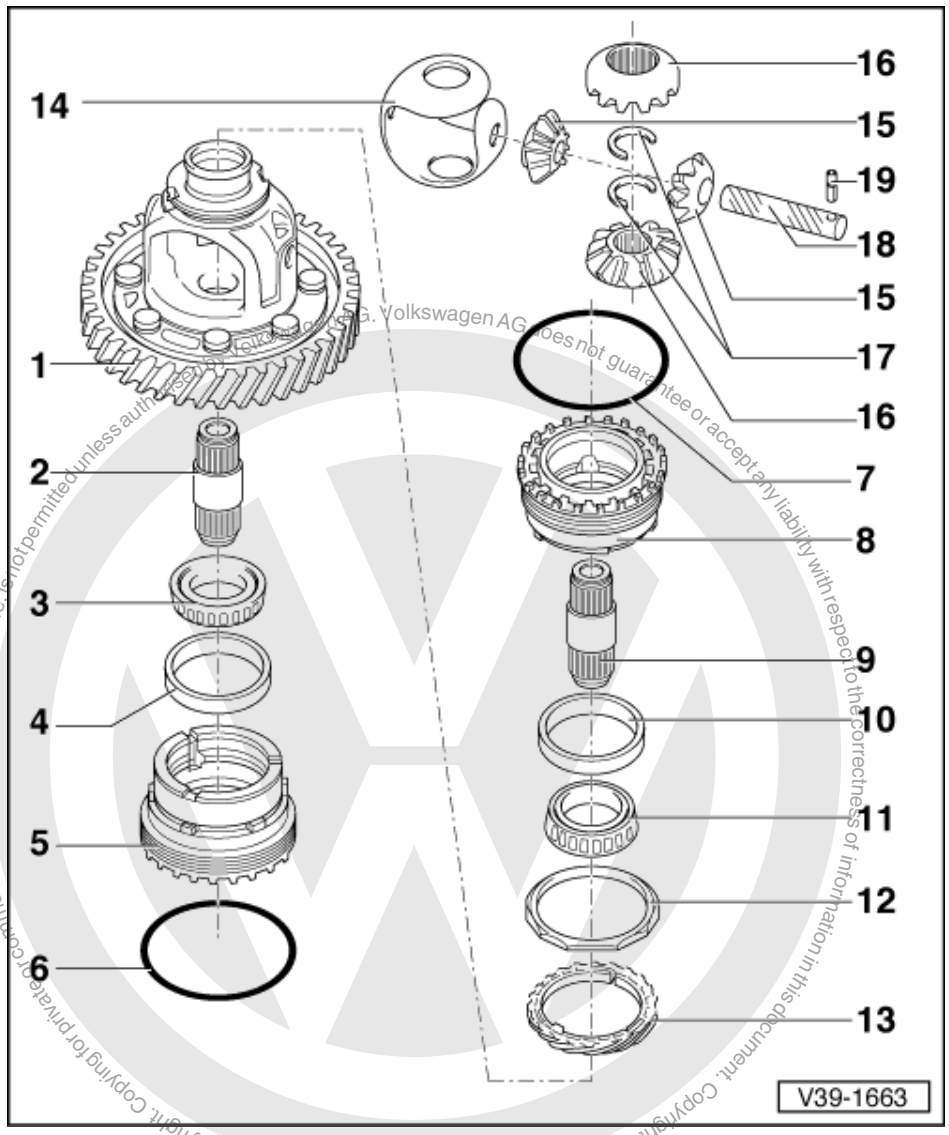

17 Circlip

Protected by copyright. Copyright by Volkswagen AG.
Copyright by Volkswagen AG. Volkswagen AG does not guarantee or accept any liability with respect to the correctness of information in this document.
Copying for private or commercial purposes, in part or in whole, is not permitted unless authorised by Volkswagen AG.

satelettronica

Warning!
Do not remove circlip until after pulling off flanged shaft as compression spring is pre-tensioned.

18 Shaft for bevel gears

- Drive out with a drift
- When driving in, do not damage one-piece thrust washer

19 Spring pin

- For securing shaft for bevel gears
- Removing and installing => Fig. 11

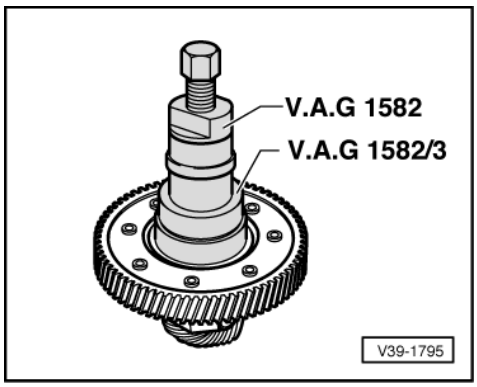

-> Fig.1 Pulling off taper roller bearing inner race

- Use adapter V.A.G 1582/6A for larger bearings
- Place press piece 30-555 or thrust plate 40-105 on differential housing.

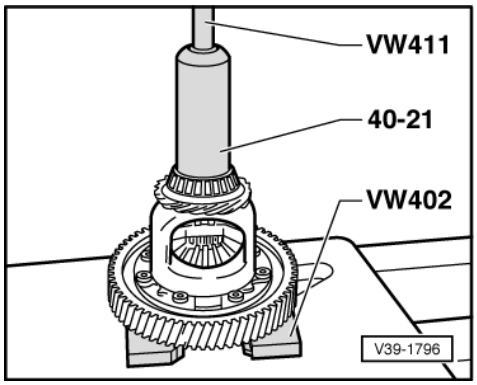

-> Fig.2 Pressing on taper roller bearing inner race

Warning!
Wear protective gloves!

- Heat inner ring before pressing on to approx. 100°C.

Pressing on inner race on other side is identical.

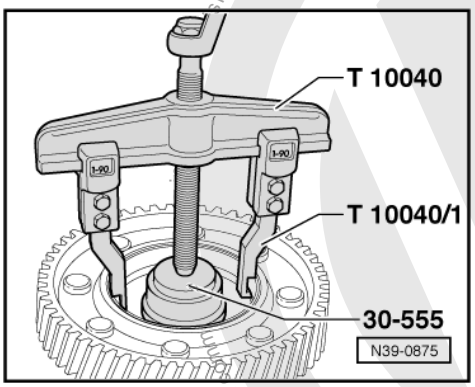

satelettronica
Protected by copyright. Copying for private or commercial purposes is not permitted unless authorised by Volkswagen AG. Volkswagen AG does not guarantee or accept any liability with respect to the correctness of information in this document. Copyright by Volkswagen AG.

-> Fig.3 Pulling out taper roller bearing outer race

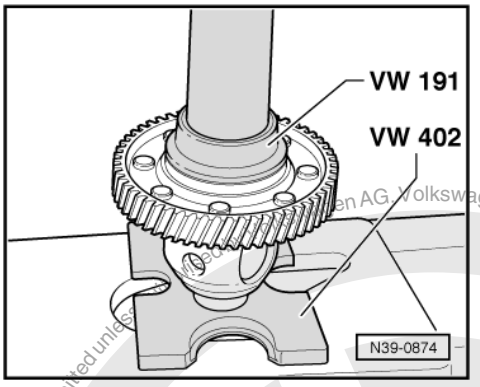

-> Fig.4 Pressing in taper roller bearing outer race

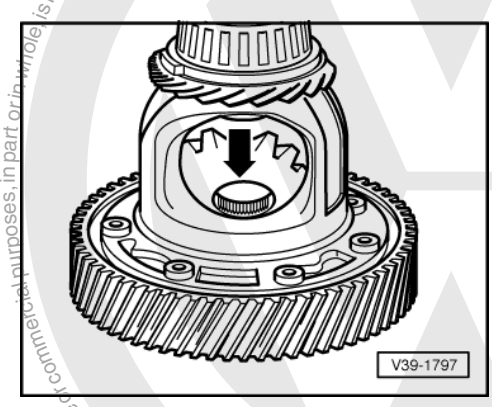

-> Fig.5 Inserting differential bevel gears

- Insert one-piece thrust washer with gear oil.
- Insert small bevel gears, drive in shaft and secure with spring pin.
- Insert large bevel gears offset 180° and swivel in in direction of arrow.

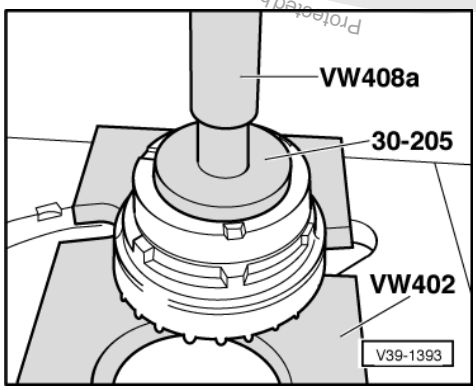

-> Fig.6 Pressing in taper roller bearing outer race

- With adjusting ring or bearing body heated, insert outer race and press home as far as the stop.

Warning! Wear protective gloves!

Protected by copyright. Copying for private or commercial purposes, in part or in whole, is not permitted unless authorised by Volkswagen AG. Volkswagen AG does not guarantee or accept any liability with respect to the correctness of information in this document. Copyright by Volkswagen AG.
satelettronica

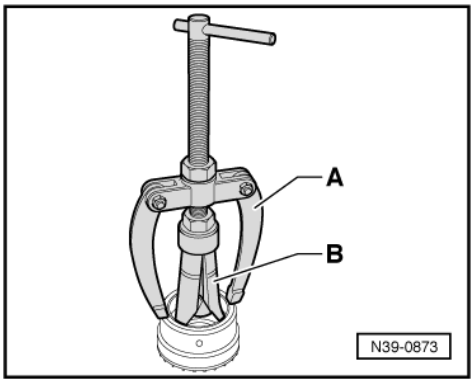

-> Fig.7 Pulling out taper roller bearing outer race

A - Kukko 22/2 counter-support

B - Kukko 21/7 internal puller

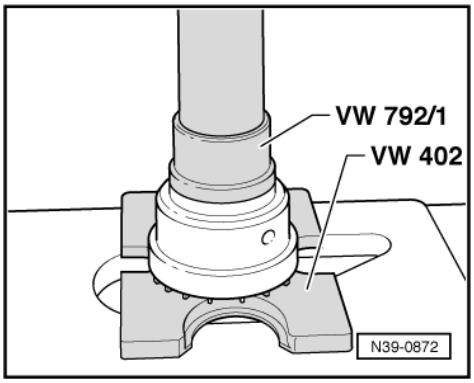

-> Fig.8 Pressing in taper roller bearing outer race

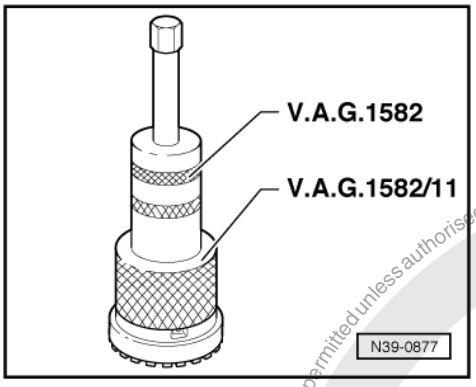

-> Fig.9 Pulling off taper roller bearing inner race

- Place press piece VW 433 on bearing body.

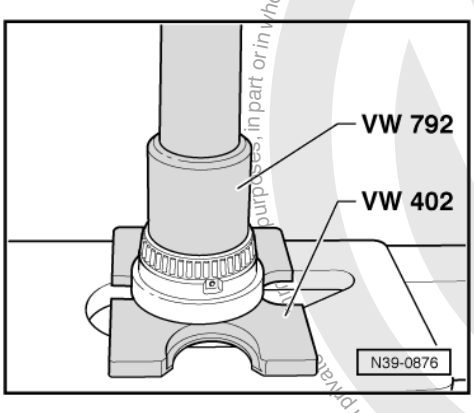

Protected by copyright. Copying for private and commercial purposes, in part or in whole, is not permitted unless authorised by Volkswagen AG. Volkswagen AG does not guarantee or accept any liability with respect to the correctness of information in this document. Copyright by Volkswagen AG.
satelettronica

-> Fig.10 Pressing on taper roller bearing inner race

Warning!
Wear protective gloves!

- Heat inner ring before pressing on to approx. 100°C.

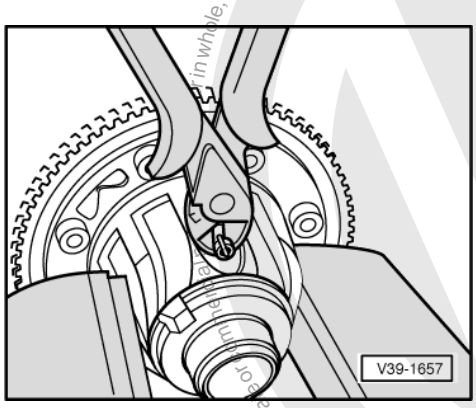

-> Fig.11 Removing and installing planet wheel axis shaft spring pin

- Length of spring pin 28.5 mm

Removing

- Pull out spring pin with side cutting pliers.

Installing

- Drive in spring pin as far as the stop.

Protected by copyright. Copying for private or commercial purposes, in whole, is not permitted unless authorised by Volkswagen AG. Volkswagen does not guarantee or accept any liability with respect to the correctness of information in this document. Copyright by Volkswagen AG.
satelettronica

4 - Adjusting final drive

4.1 - Adjusting final drive

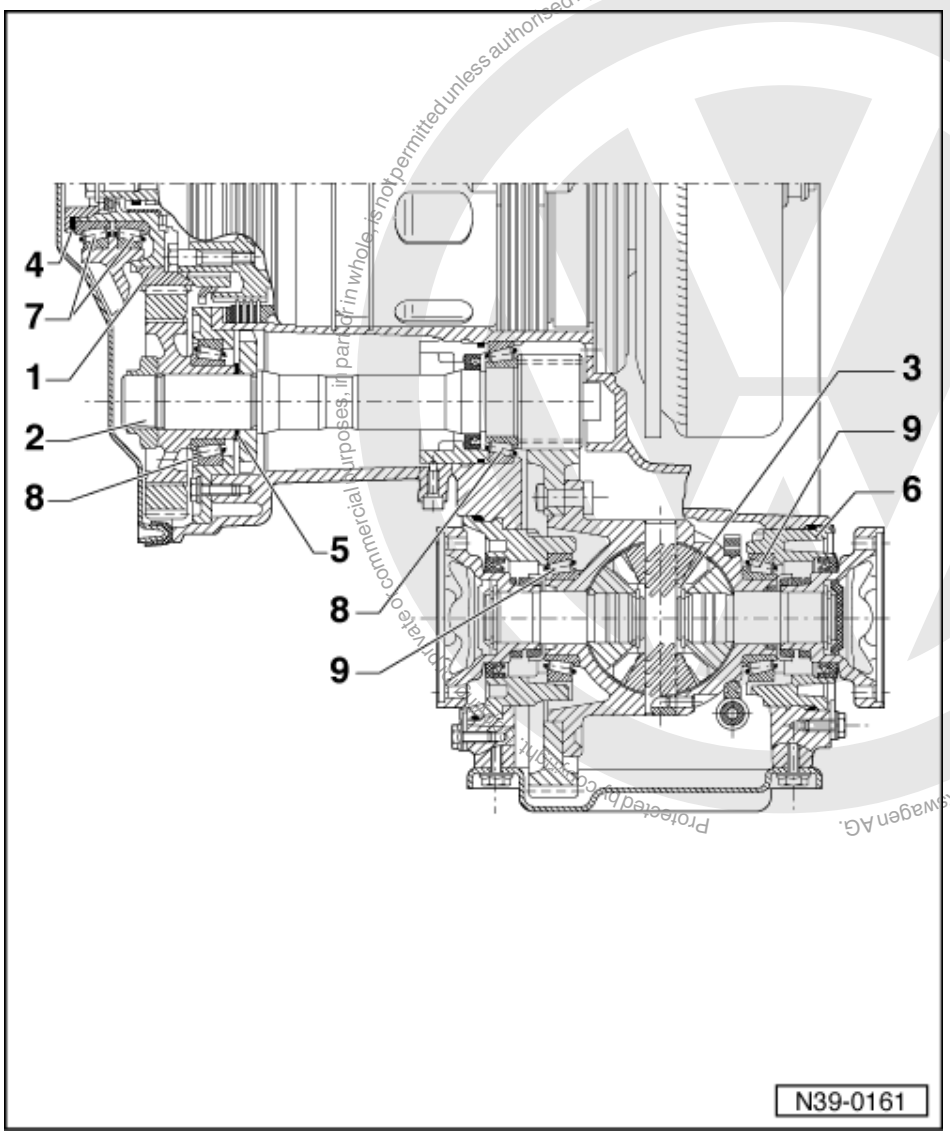

Protected by copyright. Copyright by Volkswagen AG. Volkswagen AG does not guarantee or accept any liability with respect to the correctness of information in this document. Copyright by Volkswagen AG. Private or commercial purposes, in part or in whole, is not permitted unless authorised by Volkswagen AG.

See table on Page 268 to prevent unnecessary adjustment work on final drive after making repairs.

4.2 - Overview of adjustments

1 **Input gear**
- Adjusting => Page 271

2 **Drive pinion**
- Adjusting => Page 269

3 **Differential**
- Adjusting => Page 273

4 **Shim for input gear**
- Determine thickness on basis of table => Page 271
- Determine parts number from parts catalogue

satelettronica

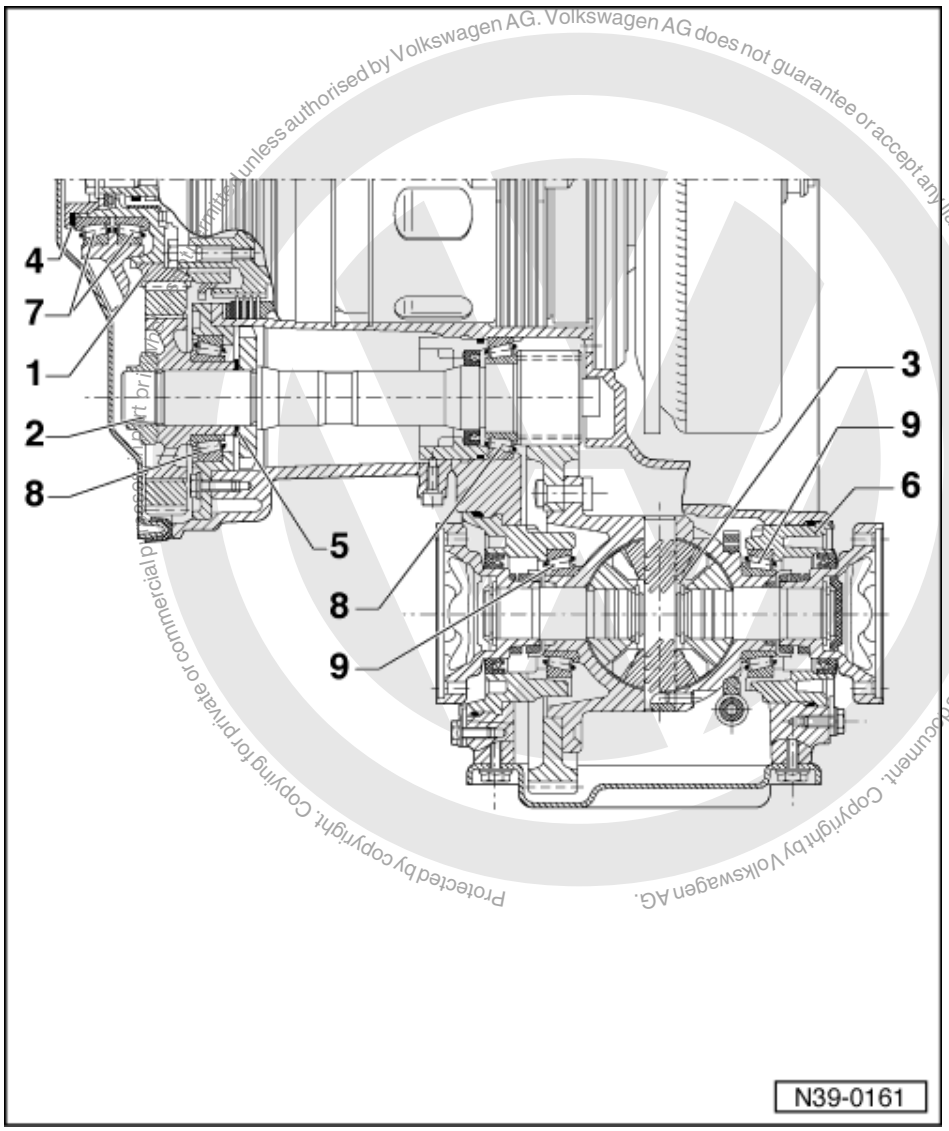

Protected by copyright. Copying for private or commercial purposes, in part or in whole, is not permitted unless authorised by Volkswagen AG. Volkswagen AG does not guarantee or accept any liability with respect to the correctness of information in this document. Copyright by Volkswagen AG.

5 Shim for drive pinion
- Determine thickness on basis of table => Page 271
- Determine parts number from parts catalogue

6 Shim for differential

7 Taper roller bearings for input gear
- Always replace together
- Re-determine shim when renewing taper roller bearings
- Adjusting => Page 271

8 Taper roller bearings for drive pinion
- Always replace together
- Re-determine shim when renewing taper roller bearings
- Adjusting => Page 269

9 Taper roller bearings for differential
- Always replace together
- Adjusting => Page 273

satelettronica

4.3 - Adjustments to be completed after renewing individual components

When work is done on the gearbox, it is necessary to readjust the input gear, drive pinion with output gear or differential cage only if parts have been renewed which directly influence the adjustment of the final drive. To avoid unnecessary adjustment work, refer to the following table:

Components being replaced:	To adjust:		
	Differential housing with riveted gear wheel => Page 273	Adjusting input gear1) => Page 271	Adjusting drive pinion with output gear1) => Page 269
Gearbox housing	X	X	X
Input gear1)		X	X
Input gear taper roller bearing		X	
Output gear1)		X	X
Drive pinion			X
Drive pinion taper roller bearing			X
Differential cage with gear wheel	X		
Taper roller bearing for differential, bearing body or shim	X		
Supporting ring, park lock gear or bearing cover			X

1) Always replace input gear and output gear together

Protected by copyright. Copying for private or commercial purposes, in part or in whole, is not permitted unless authorised by Volkswagen AG. Volkswagen AG does not guarantee or accept any liability with respect to the correctness of information in this document. Copyright by Volkswagen AG.

satelettronica

4.4 - Adjusting drive pinion

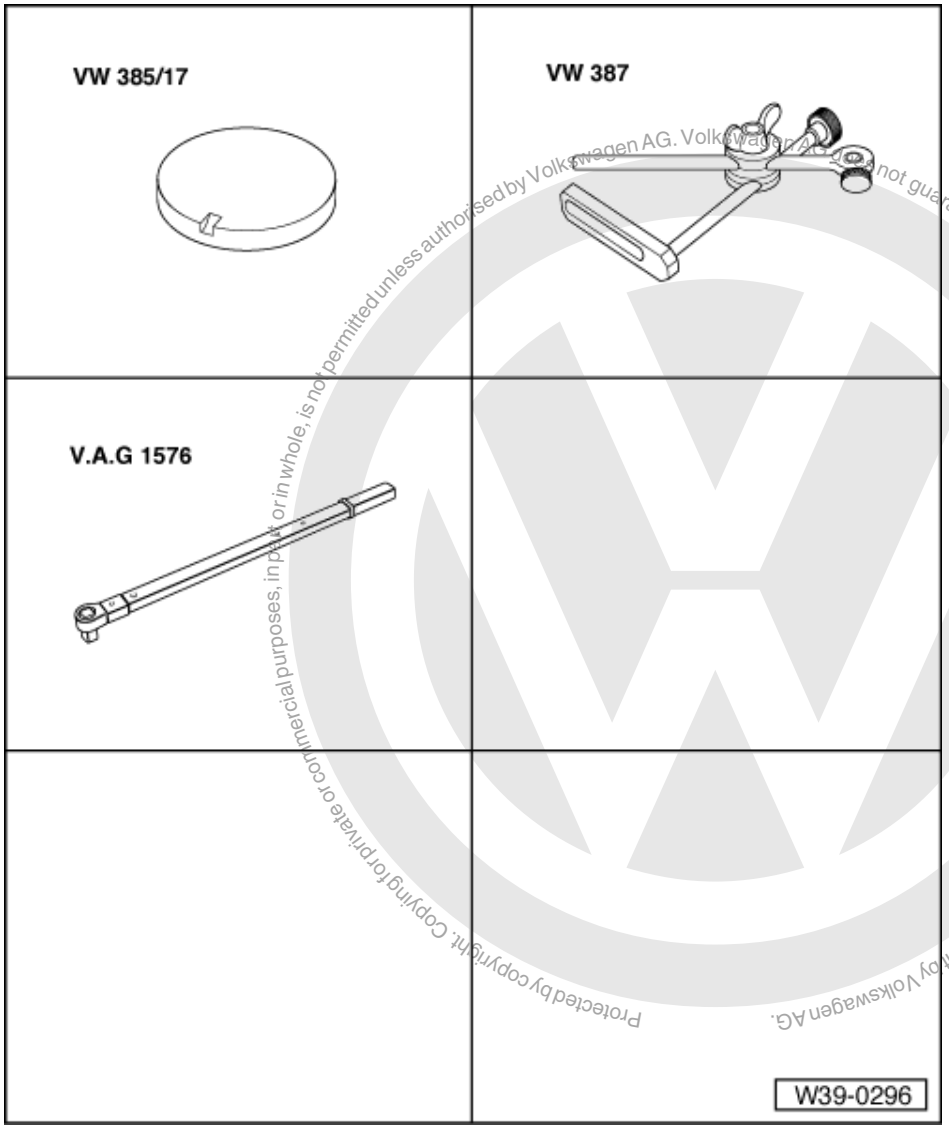

Protected by copyright. Copying for private or commercial purposes, in part or in whole, is not permitted unless authorised by Volkswagen AG. Volkswagen AG does not guarantee or accept any liability with respect to the correctness of information in this document. Copyright by Volkswagen AG.

satelettronica

Special tools, workshop equipment, test and measuring appliances and auxiliary items required

- VW 385/17 End measuring plate
- VW 387 Universal dial gauge bracket
- V.A.G 1576 Torque wrench
- Dial gauge

Conditions:

- Supporting ring for drive pinion bearing is installed and secured.

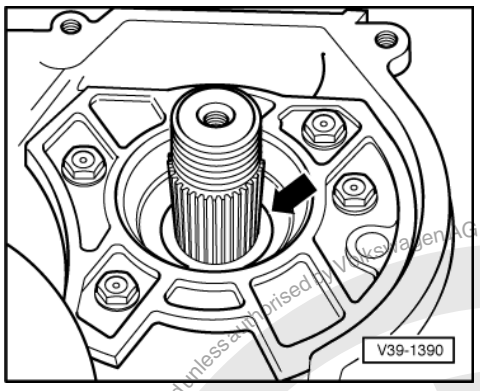

- Parking lock mechanism and parking lock gear are installed.

Adjusting:

- -> Place two shims (each 1.5 mm thick) -arrow- onto the drive pinion.
- Place output gear with taper roller bearing onto drive pinion and tighten hexagon nut (41 mm AF) to 250 Nm; engage parking lock when performing this step.

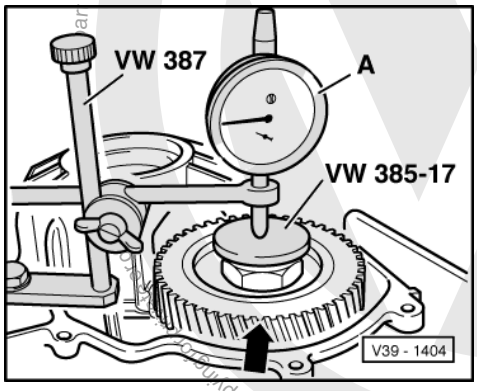

- -> Insert dial gauge -A- and zero with a preload of 1 mm. Move drive pinion up and down. Read off play at dial gauge and note (example 0.93 mm).

  Do not rotate drive pinion during measurement because otherwise bearing will settle and falsify result of measurement.

Determining shims

The specified bearing preload is achieved if the reading (0.93 mm), the preload of the bearings 0,12 mm and the amount for compression 0,10 mm are deducted from the 2 x 1.5 mm thick shims.

Example:

Shims inserted	3.00 mm
- Reading	0.93 mm
- Preload	0.12 mm
- Amount for settlement	0.10 mm
= Thickness of shim	1.85 mm

- Remove output gear. Determine size of shim on basis of table => Page 271 and fit onto drive pinion.
- Re-install output gear and tighten hexagon nut to 250 Nm and secure with drift.

Volkswagen AG does not guarantee or accept any liability with respect to the correctness of information in this document. Copyright by Volkswagen AG. Reproduction or copy is not permitted unless authorised by Volkswagen AG.
satelettronica

Table of shims for drive pinion and input gear

Gauged thickness (mm)	Shim to be fitted (mm)	Gauged thickness (mm)	Shim to be fitted (mm)	Gauged thickness (mm)	Shim to be fitted (mm)
0.975 ... 0.999	1.000	1.550 ... 1.574	1.575	2.125 ... 2.149	2.150
1.000 ... 1.024	1.025	1.575 ... 1.599	1.600	2.150 ... 1.274	2.175
1.025 ... 1.049	1.050	1.600 ... 1.624	1.625	2.175 ... 2.199	2.200
1.050 ... 1.074	1.075	1.625 ... 1.649	1.650	2.200 ... 2.224	2.225
1.075 ... 1.099	1.100	1.650 ... 1.674	1.675	2.225 ... 2.249	2.250
1.100 ... 1.124	1.125	1.675 ... 1.699	1.700	2.250 ... 2.274	2.275
1.125 ... 1.149	1.150	1.700 ... 1.724	1.725	2.275 ... 2.299	2.300
1.150 ... 1.174	1.175	1.725 ... 1.749	1.750	2.230 ... 2.324	2.325
1.175 ... 1.199	1.200	1.750 ... 1.774	1.775	2.325 ... 2.349	2.350
1.200 ... 1.224	1.225	1.775 ... 1.799	1.800	2.350 ... 2.374	2.375
1.225 ... 1.249	1.250	1.800 ... 1.824	1.825	2.375 ... 2.399	2.400
1.250 ... 1.274	1.275	1.825 ... 1.849	1.850	2.400 ... 2.424	2.425
1.275 ... 1.299	1.300	1.850 ... 1.874	1.875	2.425 ... 2.449	2.450
1.300 ... 1.324	1.325	1.875 ... 1.899	1.900	2.450 ... 2.474	2.475
1.325 ... 1.349	1.350	1.900 ... 1.924	1.925	2.475 ... 2.499	2.500
1.350 ... 1.374	1.375	1.925 ... 1.949	1.950	2.500 ... 2.524	2.525
1.375 ... 1.399	1.400	1.950 ... 1.974	1.975	2.525 ... 2.549	2.550
1.400 ... 1.424	1.425	1.975 ... 1.999	2.000	2.550 ... 2.574	2.575
1.425 ... 1.449	1.450	2.000 ... 2.024	2.025	2.575 ... 2.599	2.600
1.450 ... 1.474	1.475	2.025 ... 2.049	2.050	2.600 ... 2.624	2.625
1.475 ... 1.499	1.500	2.050 ... 2.074	2.075	2.625 ... 2.649	2.650
1.500 ... 1.524	1.525	2.075 ... 2.099	2.100	2.650 ... 2.674	2.675
1.525 ... 1.549	1.550	2.100 ... 2.124	2.125	2.675 ... 2.700	2.700

Different tolerances enable the required shim thickness to be measured precisely.

Part number:

=> Parts catalogue

4.5 - Adjusting input gear

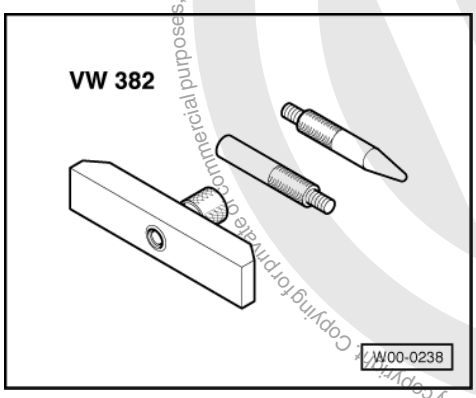

Special tools, workshop equipment, testers, measuring instruments and auxiliary items required

- VW 382 Measuring appliance

satelettronica

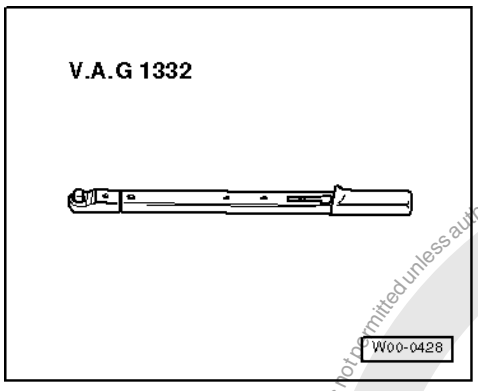

- V.A.G 1332 Torque wrench
- Dial gauge

Conditions:

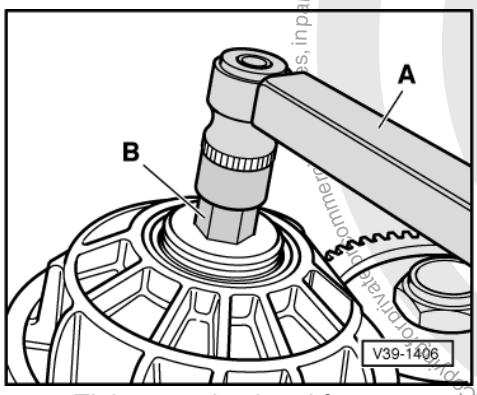

- -> Tighten socket head fastener to 100 Nm without dished washer and without shim.

  A - Torque wrench
  B - 22 mm socket
  The parking lock must be engaged.

- Remove socket head fastener.

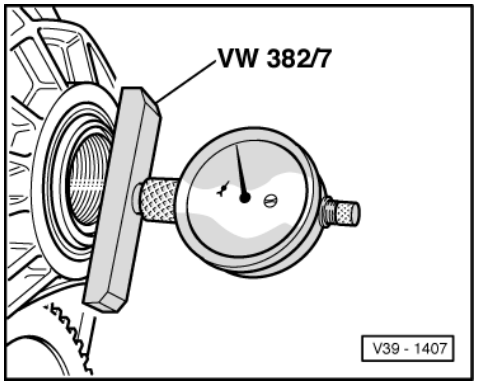

- -> Measure distance between input gear and taper roller bearing inner race.
- Insert dial gauge and zero with a preload of 3 mm. Note reading (example 1.00 mm).

  The thickness of the dished washer 1.50 mm must be added to the reading of = 2.50 mm.

Determining shim

The specified bearing preload is achieved if the bearing preload of 0.18 mm is deducted from the figure obtained from the measurement (dished washer + reading) of 2.50 mm.

Protected by copyright. Copying for private or commercial purposes, in part or in whole, is not permitted unless authorised by Volkswagen AG. Volkswagen AG does not guarantee or accept any liability with respect to the correctness of information in this document. Copyright by Volkswagen AG.
satelettronica

Example:

Dished washer + reading	2.50 mm
- Bearing preload	0.18 mm
= Thickness of shim	2.32 mm

- Determine shim on the basis of the table and fit onto drive shaft. Table of shims => Page 271 .
- Insert axial needle bearing and tighten socket head fastener including dished washer to 250 Nm.

Insert axial needle bearing for drive pinion before tightening socket head fastener. Fitting position => Removing and installing input gear, 224 .

Volkswagen AG. Volkswagen AG does not guarantee or accept any liability with respect to the correctness of information in this document. Copyright by Volkswagen AG. Protected by copyright. Copying for private or commercial purposes, in part or in whole, is not permitted unless authorised by Volkswagen AG.

4.6 - Adjusting differential

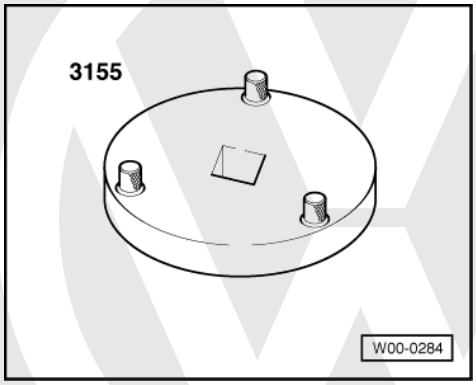

Special tools, workshop equipment, testers, measuring instruments and auxiliary items required

- 3155 Ring nut spanner

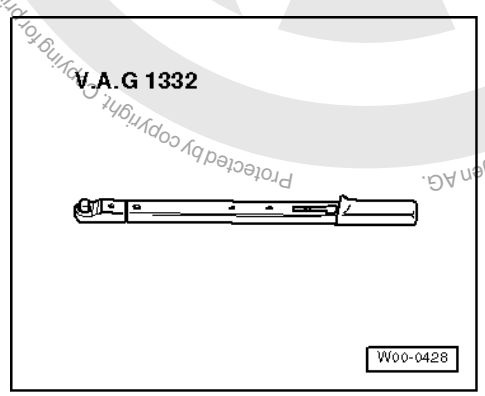

- V.A.G 1332 Torque wrench

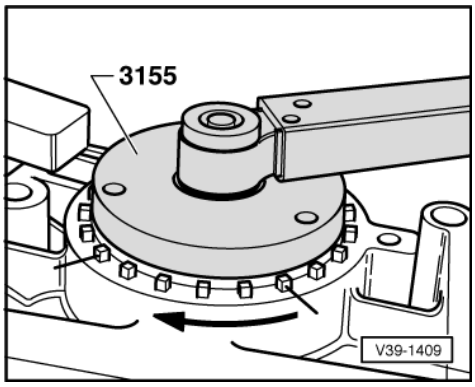

satelettronica

- -> Tighten bearing body with 3155 to 150 Nm as far as the stop and secure.
- Tighten adjusting ring to 50 Nm and mark.
- Turn adjusting ring on by five locking lugs and secure so that the preload of the taper roller bearings is set.

5 - Definitions

5.1 - Definitions

Protected by copyright. Copying for private or commercial purposes, in part or on whole, is not permitted unless authorised by Volkswagen AG. Volkswagen AG does not guarantee or accept any liability with respect to the correctness of information in this document. Copyright by Volkswagen AG.

These explanations refer only to the automatic gearbox 01M. The definitions are not necessarily valid in general.

ATF (Automatic Transmission Fluid)

Gearbox oil for automatic gearbox

ATF pump

A gear type pump driven by the torque converter.

Supplies the automatic gear change, all lubrication points and torque converter with ATF.

ATF level

Fill height of ATF in the gearbox. The function and comfort of gear changes require conscientious observance and checking of the ATF level. To check the oil level, observe instructions in workshop manual.

Exchange component

Further information => 6 .

Automatic gearbox 01M

It is characterised by a further development of the dynamic shift program and a Ravigneaux planetary gearbox.

Brakes

In conjunction with the clutches, brakes change the individual forward gears and reverse gear of the planetary gearbox and enable the various forward gear ratios. Unlike the clutches, the brakes are supported on the gearbox housing.

Data bus

Transportation of data. To do this the electrical signals are brought into a certain format (bus). Further information on this can be found in Self-study programme No. 186.

Data bus low (high)

The voltage used to transport the data is low (high). Further information on this can be found in self-study programme no. 186.

Torque converter

Transfers the engine torque to the automatic gearbox and acts as a drive-away clutch. The torque converter also includes the lock-up clutch. Further information on this can be found in Self-study programme No.112.

Self-diagnosis

The capability of the control unit:

to recognise faults,

satelettronica

to react to faults,

to store faults,

to register faults and make them available in the measured value block.

Performing self-diagnosis

Connecting the fault reader to be able to interrogate the fault memory.

Performing electrical check

A targeted check of the electronic components by performing certain measurements.

Freewheel/stator

Ensures the torque is increased in the torque converter when driving off.

Freewheel/gearbox

Technically simplifies the gear changes without interrupting the power and ensures a constant gear change quality.

Gearbox speed sender -G38-

The sender records the speed of the large sun-wheel in the planetary gearbox and transmits it to the automatic gearbox control unit. Further information on this can be found in Self-study programme No. 172.

Road speed sender -G68-

The sender determines the speed of the output gear and transmits it to the automatic gearbox control unit. Further information on this can be found in self-study programme no. 172.

Gearbox oil temperature sender -G93-

Monitors the temperature of the ATF to prevent the gearbox from overheating. It is located on the valve chest within the wiring harness to the solenoid valves. Further information on this can be found in Self-study programme No. 172.

Guided fault finding

A mode of operation in vehicle diagnosis, testing and information system VAS 5051.

Kickdown switch -F8-

The kickdown switch is integrated in the accelerator cable. When the accelerator pedal is depressed fully, the gearbox changes down for acceleration.

Clutches

In conjunction with the brakes, clutches change the individual forward gears and reverse gear of the planetary gearbox and enable the various forward gear ratios.

Wiring

Routing of electrical wiring and components in vehicle.

Selector lever lock solenoid N110

Located in the selector mechanism near the selector lever. Prevents (unintended) movement of the selector lever from positions "P" and "N" as long as the brake pedal is not depressed.

Protected by copyright. Copying for private or commercial purposes, in part or in whole, is not permitted unless authorised by Volkswagen AG. Volkswagen AG does not guarantee or accept any liability with respect to the correctness of information in this document. Copyright by Volkswagen AG.
satelettronica

Solenoid valves

Open and close the oil channels to the clutches and brakes.

Multi function switch -F125-

Electrical switch with various tasks.

Emergency running

If a sensor fails the control unit selects replacement signals and introduces replacement functions. If this is not possible the emergency running is introduced.

Emergency running is a condition of the control unit. When certain faults are recognised, it guarantees continued driving safety, protects the gearbox against damage while imparing the driving characteristics so little as necessary.

Parking lock

The selector lever controls the parking lock wheel when the vehicle is stationary and prevents the vehicle from rolling (involuntary).

Planetary gearbox

Is a mechanical component of the automatic gearbox and is switched via the clutches and brakes without loss of power.

Starter inhibitor and reversing light relay -J226-

Via this relay, the reversing light is switched on when the gear selector is in position "R". The necessary signal comes from the multi-function switch.

When the gear selector is in position "P" or "N", the starter is enabled via the relay.

Valve chest

Located on the bottom of the gearbox and is enclosed in the ATF pan. Its valves regulate the pressure and distribute it via the oil channels to the switch elements (clutches and brakes).

Control unit for automatic gearbox -J217-

Together with the dynamic shift program, the electronic control unit defines the shift points. The function of the gearbox is monitored via self-diagnosis. If a component or sensor fails, an emergency running program ensures the vehicle can still be driven.

AF

Abbreviation for across flats.

TCC (Torque converter lock-up clutch)

Transmits the engine torque mechanically to the gearbox.

Selector lever position display -Y6-

Shows the position of the selector lever and the gear selected with Tiptronic in a display in the dash panel insert.

Selector lever lock

Prevents unintentional movement of the selector lever from positions "P" and "N" as long as the brake pedal is not depressed.

Protected by copyright. Copying for private or commercial purposes, in part or in whole, is not permitted unless authorised by Volkswagen AG. Volkswagen AG does not guarantee or accept any liability with respect to the correctness of information in this document. Copyright by Volkswagen AG.
satelettronica

Ignition key withdrawal lock

Ensures that the ignition key can only be withdrawn when park position is selected and in addition mechanically locks the selector lever in this position.

Protected by copyright. Copying for private or commercial purposes, in part or in whole, is not permitted unless authorised by Volkswagen AG. Volkswagen AG does not guarantee or accept any liability with respect to the correctness of information in this document. Copyright by Volkswagen AG.

satelettronica